Beam Bracket TKO F 80 HCP

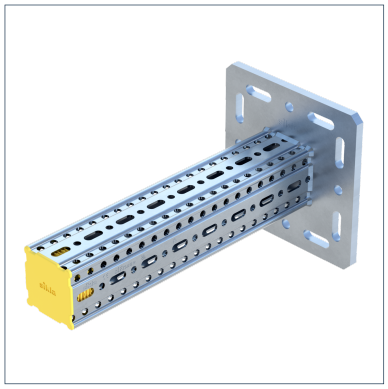

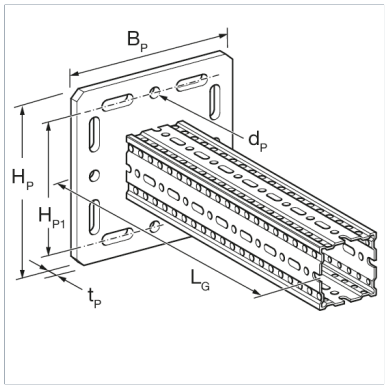

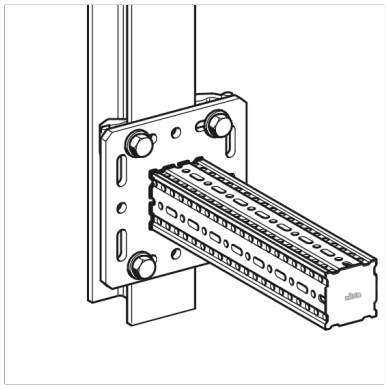

General Information

Galvanised hollow-box-section with welded end-plate to serve as cantilever arm. May be used as a crossbar when combined with End Support STA/End Support WBD and 4 x Self Forming Screw FLS.

Installation

Depending on the situation, different options are recommended:

a) Directly to building structure: 4 x suitable wall anchors M12
b) To traditional steel beams between 80 – 120 mm flange dimensions: 1x Assembly Set 5P M12 S
c) To traditional steel beams > 120 flange dimension: with on-demand Adaptor Plate
d) To Sikla siMotec Steel Beams 100/120: with Bracket Plates FV 100/120 when positive mechanical connection required

Configuration: Base plate welded to Beam Section F 80

Material Properties

Halogen-free	0
UV-resistant	0

Material

Primary element material	steel
Surface finish	HCP
Corrosion protection class	C4

Forces

Type	-V{X,Rd}	V{X,Rd}	-V{Y,Rd}	V{Y,Rd}	-V{Z,Rd}	V{Z,Rd}
TKO F 80- 400 HCP	106 kN	106 kN	64,3 kN	64,3 kN	64,3 kN	64,3 kN
TKO F 80- 800 HCP	106 kN	106 kN	64,3 kN	64,3 kN	64,3 kN	64,3 kN

Moments

Type	-M{X,Rd}	M{X,Rd}	-M{Y,Rd}	M{Y,Rd}	-M{Z,Rd}	M{Z,Rd}
TKO F 80- 400 HCP	3,7 kNm	3,7 kNm	5,5 kNm	5,5 kNm	5,5 kNm	5,5 kNm
TKO F 80- 800 HCP	3,7 kNm	3,7 kNm	5,5 kNm	5,5 kNm	5,5 kNm	5,5 kNm

Note on loadings

The specified load values are design loads Rd and include a partial safety factor $\gamma M2 = 1.25$ (DIN EN 1993-1-8:2025-04, Table 4.1)
A partial safety factor of $\gamma G = 1.35$ (DIN EN 1990:2021-10, Table A1.2(B)) must be taken into account for permanent loads.

Additional information

Also available with DualShield for high corrosion protection within C5H environments.

Beam Bracket TKO F 80 HCP

Types

Type	LG	Weight	Quantity	Part number
TKO F 80- 400 HCP	413 mm	6,600 kg/pcs.	1 pcs.	192788
TKO F 80- 800 HCP	813 mm	9,200 kg/pcs.	1 pcs.	192795

Dimensions

Type	BP	dP	HP	HP1	LG	tP
TKO F 80- 400 HCP	220 mm	14 mm	220 mm	170 mm	413 mm	12 mm
TKO F 80- 800 HCP	220 mm	14 mm	220 mm	170 mm	813 mm	12 mm

Certification

CE mark (Declaration of performance see downloads)
ETA-24/0471

Documents

siFramo - ETA-24/0471

Static Guideline - siFramo & siMotec