Channel Adapter SA F 80 HCP

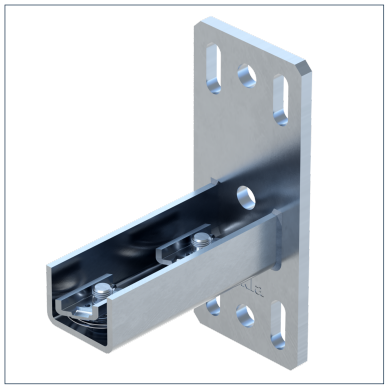

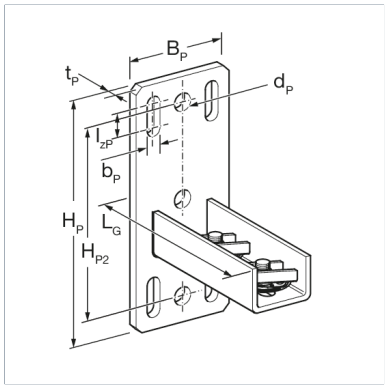

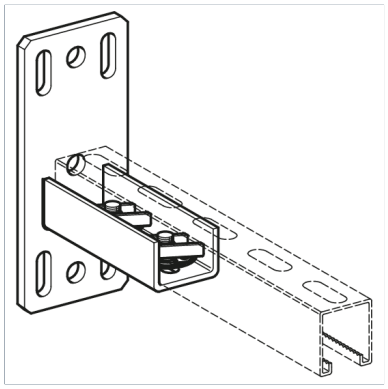

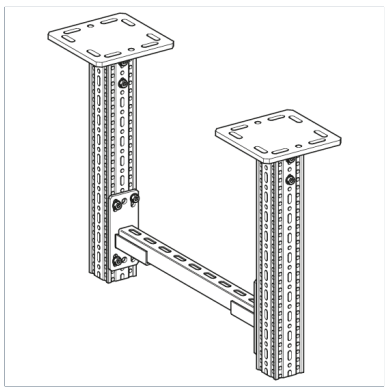

General Information

Interface element to enable a stiff and solid connection between the siFramo profile and strut channel of the international 41/41 mm standard. The 41/41 Channel Adapter SA F80 is equipped with automatically locking spring nuts which means that no accessories from the strut channel's range are required in order to make the connection.

Installation

The Channel Adapter SA F80-41 requires 4 x Self Forming Screw FLS in order to be connected to the siFramo profile. The strut channel must be inserted with the slot first whilst pressing the two bolt's heads triggering an automatic 90°-locking operation of the two channel spring nuts. The strut channel is now securely held and can be adjusted. Finally the two screws must be tightened with the appropriate torque for the strut channel used.

Material Properties

Halogen-free	0
UV-resistant	0

Material

Primary element material	steel
Surface finish	HCP
Corrosion protection class	C4

Forces

Type	-V{X,Rd}	V{X,Rd}	-V{Y,Rd}	V{Y,Rd}	-V{Z,Rd}	V{Z,Rd}
SA F 80-41 HCP	3,3 kN	3,3 kN	26,6 kN	26,6 kN	24,1 kN	24,1 kN

Moments

Type	-M{Y,Rd}	M{Y,Rd}	-M{Z,Rd}	M{Z,Rd}
SA F 80-41 HCP	0,7 kNm	0,7 kNm	0,9 kNm	0,9 kNm

Note on loadings

The specified load values are design loads Rd and include a partial safety factor $\gamma M2 = 1.25$ (DIN EN 1993-1-8:2025-04, Table 4.1)
A partial safety factor of $\gamma G = 1.35$ (DIN EN 1990:2021-10, Table A1.2(B)) must be taken into account for permanent loads.

Additional information

Also available with DualShield for high corrosion protection within C5H environments.

Types

Type	LG	Weight	Quantity	Part number
SA F 80-41 HCP	134 mm	1,400 kg/pcs.	1 pcs.	192887

Channel Adapter SA F 80 HCP

Dimensions

Type	BP	bP	dP	HP	HP2	lzP	LG	tP
SA F 80-41 HCP	80 mm	11 mm	14 mm	190 mm	150 mm	20 mm	134 mm	8 mm

Certification