Roof Connector DF AH HCP

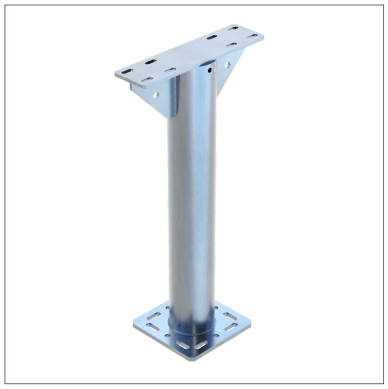

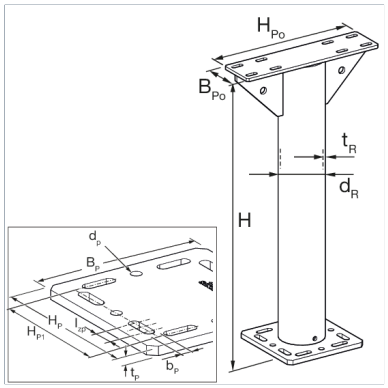

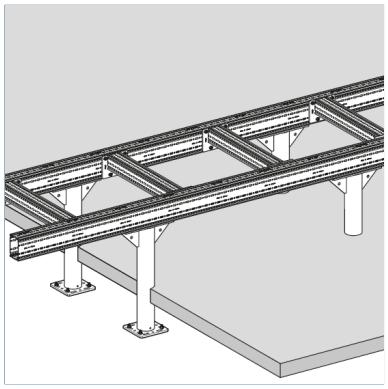

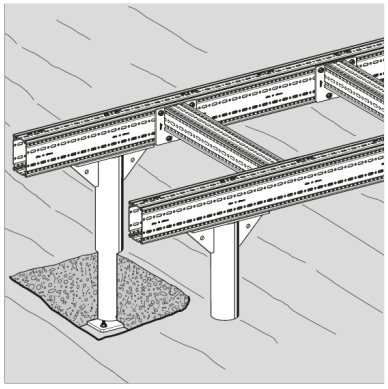

General Information

Enables direct connection of TP F 100 and TP F 100/160 support profiles on various roof types.

Installation

Connection of support profiles TP F 100 and TP F 100/160 by means of 8 Formlock screws FLS F.
Fastening to roofs and concrete using heavy-duty anchors M12.
Important: The zinc drain holes in the support tube must be sealed after installation. If insulation is required in the support tube, it can be provided by the customer, e.g. by foaming.

Material Properties

Halogen-free	0
UV-resistant	0

Material

Primary element material	steel
Surface finish	HCP
Corrosion protection class	C4

Types

Type	Weight	Quantity	Part number
DF AH 746 HCP	20 kg/pcs.	1 pcs.	117171

Dimensions

Type	BP	bP	BPo	dP	dR	H	HP	HP1	HPo	lzP	tP	tR
DF AH 746 HCP	220 mm	14 mm	100 mm	14 mm	114,3 mm	746 mm	220 mm	170 mm	383 mm	30 mm	12 mm	7,1 mm

Certification

Stahl