Assembly Group BG22 F100 HCP

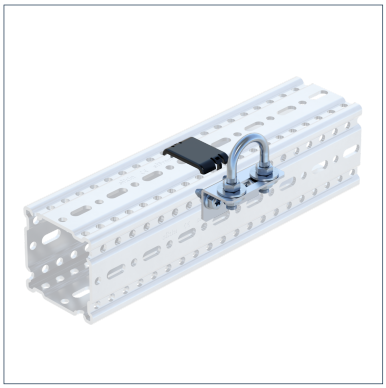

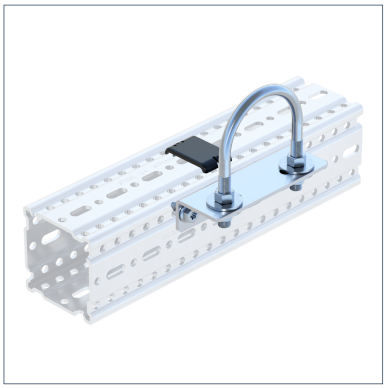

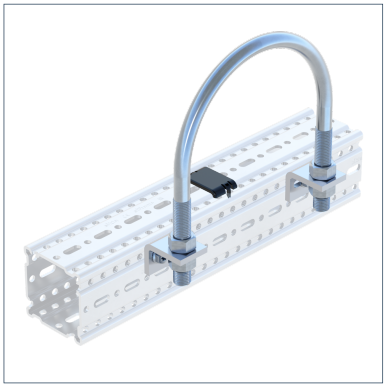

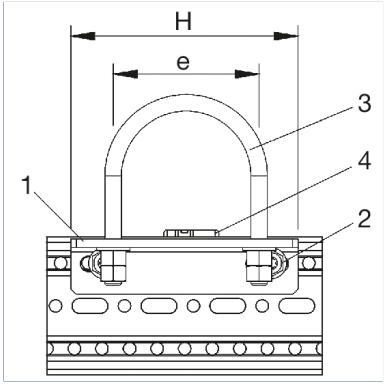

General Information

An Assembly Group for the fastening of pipes without complex requirements and without heat insulation on siFramo F 100 sections. By adapting the hexagon nuts supplied, both guided supports and fixed points can be created. The U Bolt fasteners supplied vary depending on the required clamping range.

Installation

The assembly of the individual components to form an Assembly Group is carried out during the course of pipe installation on the construction site. When used as a guided support, the nuts located both above and below the UB fastening must be tightened, enabling the pipe to freely move. In the case of permanent pipe connections, the permissible forces of the structural connection and bending forces of the bolt must not be exceeded.

Material Properties

Halogen-free	0
UV-resistant	0

Material

Primary element material	steel
Sliding element material	PA 6.0
Connecting element material	steel
Surface finish	HCP
Corrosion protection class	C4

Types

Type	Pipe diameter (outside)	Weight	Quantity	Part number
BG22 F100 DN 15 HCP	21,30 mm	0,280 kg/pcs.	1 pcs.	113977
BG22 F100 DN 20 HCP	26,90 mm	0,320 kg/pcs.	1 pcs.	113978
BG22 F100 DN 25 HCP	33,70 mm	0,320 kg/pcs.	1 pcs.	113979
BG22 F100 DN 32 HCP	42,40 mm	0,340 kg/pcs.	1 pcs.	113980
BG22 F100 DN 40 HCP	48,30 mm	0,340 kg/pcs.	1 pcs.	113981
BG22 F100 DN 50 HCP	60,30 mm	0,940 kg/pcs.	1 pcs.	113982
BG22 F100 DN 65 HCP	76,10 mm	0,970 kg/pcs.	1 pcs.	113983
BG22 F100 DN 80 HCP	88,90 mm	1,000 kg/pcs.	1 pcs.	113984
BG22 F100 DN 100 HCP	114,30 mm	1,060 kg/pcs.	1 pcs.	113985
BG22 F100 DN 125 HCP	139,70 mm	1,140 kg/pcs.	1 pcs.	113986
BG22 F100 DN 150 HCP	168,30 mm	1,230 kg/pcs.	1 pcs.	113987
BG22 F100 DN 200 HCP	219,10 mm	2,030 kg/pcs.	1 pcs.	116919
BG22 F100 DN 250 HCP	273,00 mm	2,300 kg/pcs.	1 pcs.	116920

Assembly Group BG22 F100 HCP

Type	Pipe diameter (outside)	Weight	Quantity	Part number
BG22 F100 DN 300 HCP	323,90 mm	2,940 kg/pcs.	1 pcs.	116921

Dimensions

Type	e	H
BG22 F100 DN 15 HCP	30 mm	85 mm
BG22 F100 DN 20 HCP	40 mm	85 mm
BG22 F100 DN 25 HCP	48 mm	85 mm
BG22 F100 DN 32 HCP	56 mm	85 mm
BG22 F100 DN 40 HCP	62 mm	85 mm
BG22 F100 DN 50 HCP	76 mm	146 mm
BG22 F100 DN 65 HCP	94 mm	146 mm
BG22 F100 DN 80 HCP	106 mm	146 mm
BG22 F100 DN 100 HCP	136 mm	181 mm
BG22 F100 DN 125 HCP	164 mm	209 mm
BG22 F100 DN 150 HCP	192 mm	237 mm
BG22 F100 DN 200 HCP	248 mm	293 mm
BG22 F100 DN 250 HCP	302 mm	347 mm
BG22 F100 DN 300 HCP	352 mm	397 mm

Certification