Assembly Group BG16 F100-1/2'' HCP

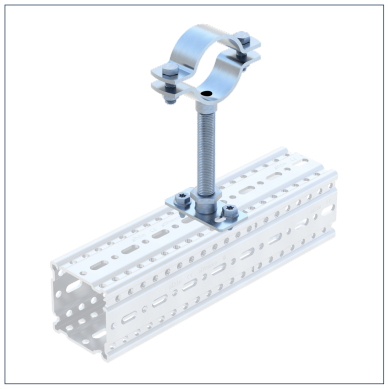

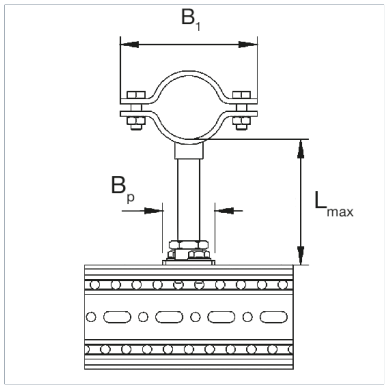

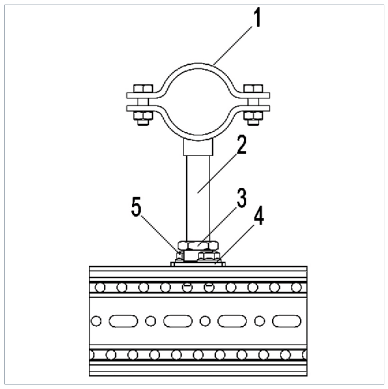

General Information

An Assembly Group containing components to make up a permanent pipe connection with the heavy Pipe Clamp Stabil I-1/2'. The Assembly Group is designed for use with the Beam Section TP F 100. It is connected using the Self Forming Screw FLS F, and the height is adjusted via the Threaded Tube 1/2'.

Installation

The assembly of the individual components to form an Assembly Group is carried out during the course of pipe installation on the construction site.

Material Properties

Halogen-free	0
UV-resistant	0

Material

Primary element material	steel
Connecting element material	steel
Surface finish	HCP
Corrosion protection class	C4

Types

Type	Size min.	Size max.	DN	Weight	Quantity	Part number
BG16 F100-1/2'' DN 15 HCP	16,00 mm	22,00 mm	DN 15 (1/2")	0,870 kg/ pcs.	1 pcs.	113842
BG16 F100-1/2'' DN 20 HCP	23,00 mm	27,00 mm	DN 20 (3/4")	0,880 kg/ pcs.	1 pcs.	113843
BG16 F100-1/2'' DN 25 HCP	30,00 mm	34,00 mm	DN 25 (1")	0,910 kg/ pcs.	1 pcs.	113844
BG16 F100-1/2'' DN 32 HCP	39,00 mm	44,00 mm	DN 32 (1 1/4")	0,950 kg/ pcs.	1 pcs.	113845
BG16 F100-1/2'' DN 40 HCP	44,00 mm	49,00 mm	DN 40 (1 1/2")	0,970 kg/ pcs.	1 pcs.	113846
BG16 F100-1/2'' DN 50 HCP	57,00 mm	61,00 mm	DN 50 (2")	1,190 kg/ pcs.	1 pcs.	113847
BG16 F100-1/2'' DN 65 HCP	73,00 mm	77,00 mm	DN 65 (2 1/2")	1,270 kg/ pcs.	1 pcs.	113848
BG16 F100-1/2'' DN 80 HCP	85,00 mm	89,00 mm	DN 80 (3")	1,330 kg/ pcs.	1 pcs.	113849
BG16 F100-1/2'' DN 100 HCP	109,00 mm	116,00 mm	DN 100 (4")	1,620 kg/ pcs.	1 pcs.	113850

Assembly Group BG16 F100-1/2'' HCP

Dimensions

Type	B1	BP	Lmax	Lmax horizontal
BG16 F100-1/2'' DN 15 HCP	85 mm	50 mm	200 mm	150 mm
BG16 F100-1/2'' DN 20 HCP	92 mm	50 mm	200 mm	150 mm
BG16 F100-1/2'' DN 25 HCP	100 mm	50 mm	200 mm	150 mm
BG16 F100-1/2'' DN 32 HCP	112 mm	50 mm	200 mm	150 mm
BG16 F100-1/2'' DN 40 HCP	117 mm	50 mm	200 mm	150 mm
BG16 F100-1/2'' DN 50 HCP	139 mm	50 mm	200 mm	150 mm
BG16 F100-1/2'' DN 65 HCP	156 mm	50 mm	200 mm	150 mm
BG16 F100-1/2'' DN 80 HCP	168 mm	50 mm	200 mm	150 mm
BG16 F100-1/2'' DN 100 HCP	194 mm	50 mm	200 mm	150 mm

Certification