Assembly Group BG44 F 80-1/2'' HCP

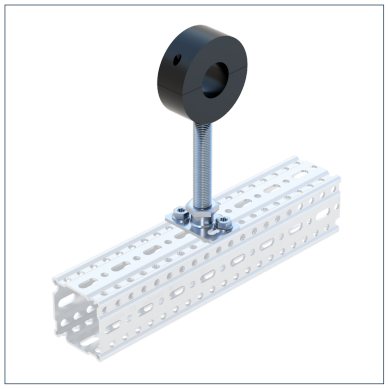

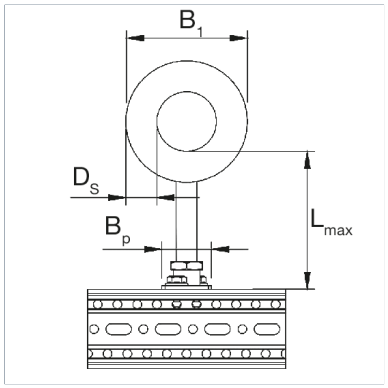

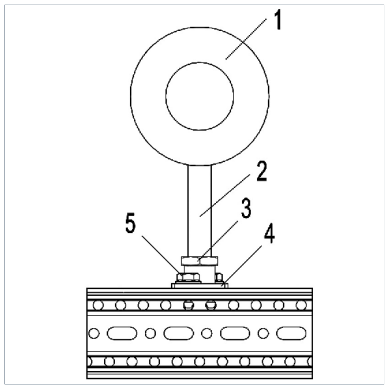

General Information

An Assembly Group containing components to make up a permanent pipe connection with the insulated Chilled Water Clamp RB for chiller plants and cool water systems. The Assembly Group is designed for use with the Beam Section TP F 80. It is connected using Self Forming Screw FLS F, and the height is adjusted via the Threaded Tube 1/2'.

Installation

The assembly of the individual components to form an Assembly Group is carried out during the course of pipe installation on the construction site.

Temperature

Max. temperature	105 °C
Min. temperature	-50 °C

Thermal Conductivity

Thermal conductivity λ {0°C}	λ 0,045 W/Mk

Material Properties

Halogen-free	0
UV-resistant	0
Water vapour diffusion resistance factor	μ 1200

Material

Primary element material	steel
Isolating element material	PUR
Connecting element material	steel
Surface finish	HCP
Corrosion protection class	C4

Fire Performance

Class B2 according to DIN 4102

Types

Type	DN	Weight	Quantity	Part number
BG44 F 80-1/2'' DN 15 HCP	DN 15 (1/2")	0,730 kg/pcs.	1 pcs.	110283
BG44 F 80-1/2'' DN 20 HCP	DN 20 (3/4")	0,730 kg/pcs.	1 pcs.	110284
BG44 F 80-1/2'' DN 25 HCP	DN 25 (1")	0,740 kg/pcs.	1 pcs.	110285
BG44 F 80-1/2'' DN 32 HCP	DN 32 (1 1/4")	0,750 kg/pcs.	1 pcs.	110286

Assembly Group BG44 F 80-1/2'' HCP

Type	DN	Weight	Quantity	Part number
BG44 F 80-1/2'' DN 40 HCP	DN 40 (1 1/2")	0,750 kg/pcs.	1 pcs.	110287
BG44 F 80-1/2'' DN 50 HCP	DN 50 (2")	0,840 kg/pcs.	1 pcs.	110289
BG44 F 80-1/2'' DN 65 HCP	DN 65 (2 1/2")	0,960 kg/pcs.	1 pcs.	110290
BG44 F 80-1/2'' DN 80 HCP	DN 80 (3")	1,010 kg/pcs.	1 pcs.	110291
BG44 F 80-1/2'' DN 100 HCP	DN 100 (4")	1,590 kg/pcs.	1 pcs.	110292

Dimensions

Type	B1	BP	DS	Lmax	Lmax horizontal
BG44 F 80-1/2'' DN 15 HCP	81 mm	50 mm	30 mm	200 mm	150 mm
BG44 F 80-1/2'' DN 20 HCP	87 mm	50 mm	30 mm	200 mm	150 mm
BG44 F 80-1/2'' DN 25 HCP	93 mm	50 mm	30 mm	200 mm	150 mm
BG44 F 80-1/2'' DN 32 HCP	102 mm	50 mm	30 mm	200 mm	150 mm
BG44 F 80-1/2'' DN 40 HCP	108 mm	50 mm	30 mm	200 mm	150 mm
BG44 F 80-1/2'' DN 50 HCP	120 mm	50 mm	30 mm	200 mm	150 mm
BG44 F 80-1/2'' DN 65 HCP	136 mm	50 mm	30 mm	200 mm	150 mm
BG44 F 80-1/2'' DN 80 HCP	149 mm	50 mm	30 mm	200 mm	150 mm
BG44 F 80-1/2'' DN 100 HCP	195 mm	50 mm	30 mm	200 mm	150 mm

Certification

