Assembly Group BG15 F 80 M10 HCP

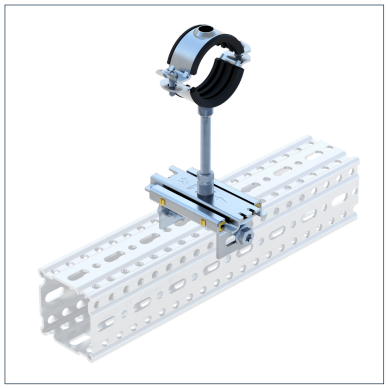

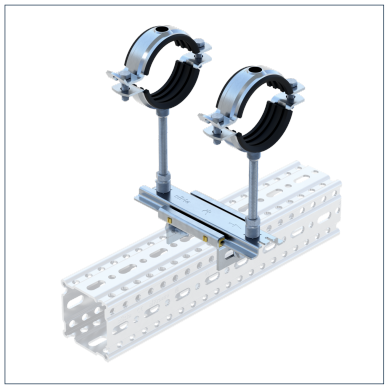

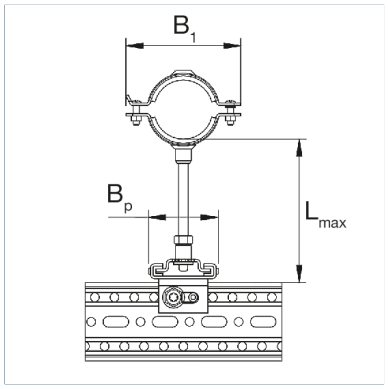

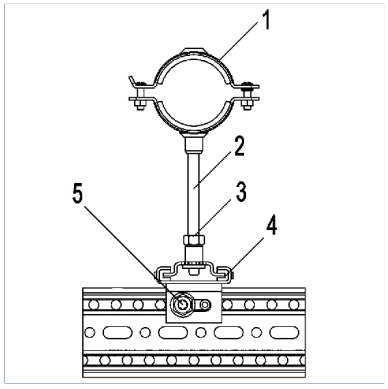

General Information

An Assembly Group for use as a guided support with the pipe clamp Stabil D-3G. The Assembly Group is designed for use with the Beam Section TP F 80. It is connected using the Self Forming Screw FLS F, and the height is adjusted via the Threaded Rod M10.

Installation

The assembly of the individual components to form an Assembly Group is carried out during the course of pipe installation on the construction site.

L(max, horizontal) = not recommended

Material Properties

Halogen-free	0
UV-resistant	0

Material

Primary element material	steel
Isolating element material	SBR/EPDM
Connecting element material	steel
Surface finish	HCP
Corrosion protection class	C4

Types

Type	Size min.	Size max.	DN	Weight	Quantity	Part number
BG15 F 80 M10 DN 15 HCP	19,00 mm	23,00 mm	DN 15 (1/2")	0,860 kg/ pcs.	1 pcs.	110218
BG15 F 80 M10 DN 20 HCP	24,00 mm	28,00 mm	DN 20 (3/4")	0,890 kg/ pcs.	1 pcs.	110219
BG15 F 80 M10 DN 25 HCP	33,00 mm	37,00 mm	DN 25 (1")	0,910 kg/ pcs.	1 pcs.	110220
BG15 F 80 M10 DN 32 HCP	40,00 mm	45,00 mm	DN 32 (1 1/4")	0,930 kg/ pcs.	1 pcs.	110221
BG15 F 80 M10 DN 40 HCP	47,00 mm	52,00 mm	DN 40 (1 1/2")	0,950 kg/ pcs.	1 pcs.	110222
BG15 F 80 M10 DN 50 HCP	60,00 mm	65,00 mm	DN 50 (2")	0,970 kg/ pcs.	1 pcs.	110223
BG15 F 80 M10 DN 65 HCP	73,00 mm	80,00 mm	DN 65 (2 1/2")	1,550 kg/ pcs.	1 pcs.	110224
BG15 F 80 M10 DN 80 HCP	88,00 mm	93,00 mm	DN 80 (3")	1,650 kg/ pcs.	1 pcs.	110225
BG15 F 80 M10 DN 100 HCP	108,00 mm	115,00 mm	DN 100 (4")	1,770 kg/ pcs.	1 pcs.	110226

Assembly Group BG15 F 80 M10 HCP

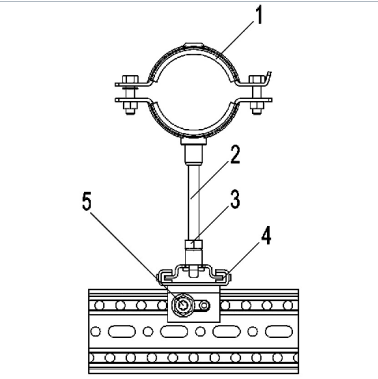

Dimensions

Type	B1	BP	Lmax
BG15 F 80 M10 DN 15 HCP	68 mm	67 mm	150 mm
BG15 F 80 M10 DN 20 HCP	75 mm	67 mm	150 mm
BG15 F 80 M10 DN 25 HCP	81 mm	67 mm	150 mm
BG15 F 80 M10 DN 32 HCP	93 mm	67 mm	150 mm
BG15 F 80 M10 DN 40 HCP	104 mm	67 mm	150 mm
BG15 F 80 M10 DN 50 HCP	117 mm	67 mm	150 mm
BG15 F 80 M10 DN 65 HCP	150 mm	67 mm	150 mm
BG15 F 80 M10 DN 80 HCP	164 mm	67 mm	150 mm
BG15 F 80 M10 DN 100 HCP	187 mm	67 mm	150 mm

Certification

Stahl