Insulated Foot Plate SHB SQF 41

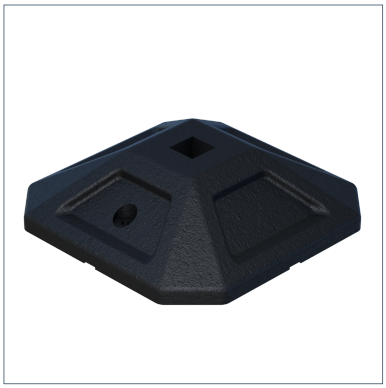

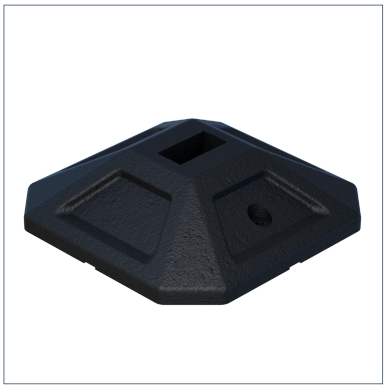

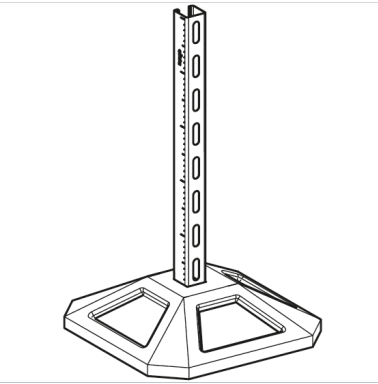

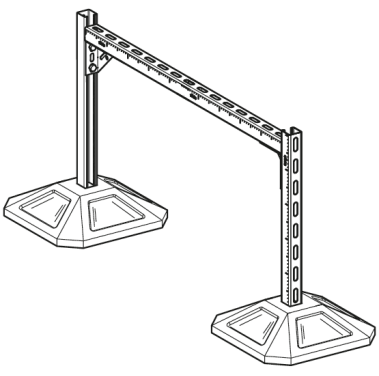

General Information

Comprehensive solution out of synthetic rubber for flat roofs and central energy supply centers with coated floor. In combination with the Sikla Assembly System any structures can quickly and simply be realised. The water permeable rubber allows a secure and reliable support with constant load distribution. Particularly suitable for the fixation of aggregates, pipings, ventilation ducts and walkways. Depending on the Insulated Foot either a Channel MS 41/41 or a Channel MS 41/41 D can be plugged in.

Installation

Insert the Channel MS 41/41 or 41/41 D into the Insulated Foot's slot.

Insertion depth:
Type SQF 350: 60 mm
Type SQF 500: 90 mm

Tests to determine the coefficient of friction shall be carried out by the customer. Depending on the used roofing film the customer has to decide if an additional separation layer (e.g. fleece) is necessary. Furthermore the statics have to be verified by a qualified engineer.

Material Properties

Halogen-free	0
UV-resistant	0

Material

Primary element material	SBR

Forces

Type	V{Z,perm.}
SHB SQF 41 - 350	9,00 kN
SHB SQF 41 - 500	16,00 kN
SHB SQF 41 D - 350	9,00 kN
SHB SQF 41 D - 500	16,00 kN

Types

Type	Weight	Quantity	Part number
SHB SQF 41 - 350	5 kg/pcs.	1 pcs.	218875
SHB SQF 41 - 500	14,94 kg/pcs.	1 pcs.	218881
SHB SQF 41 D - 350	5,12 kg/pcs.	1 pcs.	218876
SHB SQF 41 D - 500	14,47 kg/pcs.	1 pcs.	218882

Dimensions

Type	B	H	H1	L
SHB SQF 41 - 350	350 mm	100 mm	60 mm	350 mm

Insulated Foot Plate SHB SQF 41

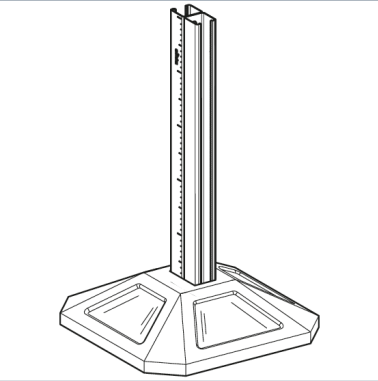

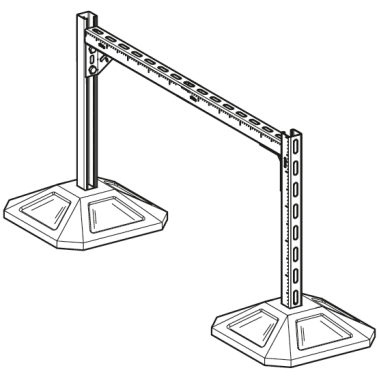

Type	B	H	H1	L
SHB SQF 41 - 500	500 mm	130 mm	90 mm	500 mm
SHB SQF 41 D - 350	350 mm	100 mm	60 mm	350 mm
SHB SQF 41 D - 500	500 mm	130 mm	90 mm	500 mm

Certification

epd-global
Powered by EPD-Norway