Channel Connector SK L HCP

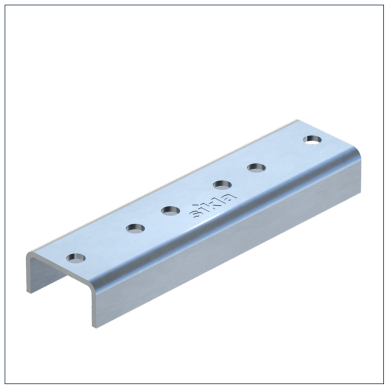

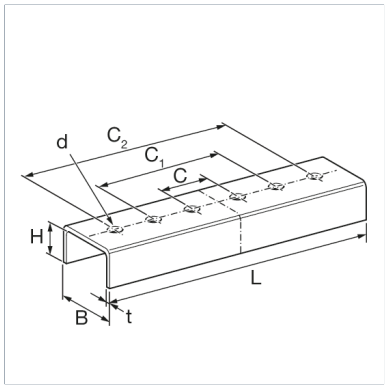

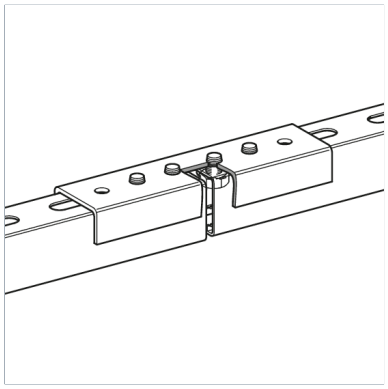

General Information

Element for connecting Channels. The multiple bearing of the Channel is to be secured. The Channel Connector should not to be used between the last two bearing points. In combination with Channels > 41/21 the admissible limit has to be respected.

Installation

Position the Channel Connector on the back of the channel and bolt together the channel ends (through the channel slots) by means of each two Self Forming Screws FLS F.
Suitable for Sikla Channel MS 41.

Material Properties

Halogen-free	0
UV-resistant	0

Material

Primary element material	steel
Surface finish	HCP
Corrosion protection class	C4

Moments

Type	M{Y,perm.}
SK L HCP	0,3 kNm

Types

Type	Weight	Quantity	Part number
SK L HCP	0,361 kg/pcs.	10 pcs.	198971

Dimensions

Type	B	C	C1	C2	H	L	t
SK L HCP	41,5 mm	35 mm	82 mm	160 mm	21 mm	180 mm	3 mm

Certification