Channel Nut NT 27

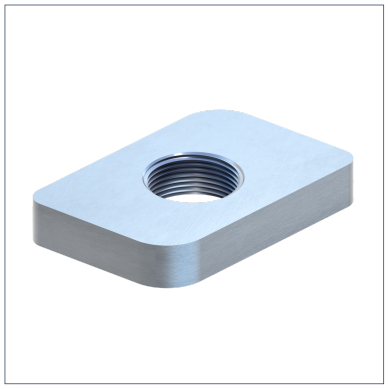

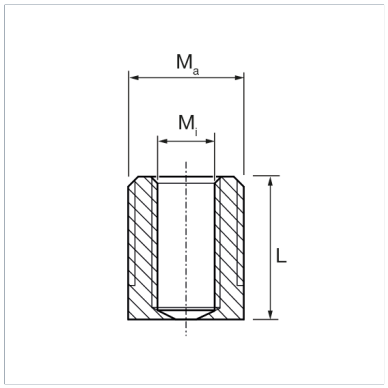

General Information

Channel Nuts type 27 are suitable for channels of 27 mm width.

Material Properties

Halogen-free	0
UV-resistant	0

Material

Primary element material	steel
Surface finish	electro galvanized (Fe//Zn)
Corrosion protection class	C2

Forces

Type	-V{Z,perm.}
NT 27-M 8	1,70 kN
NT 27-M10	1,70 kN

Types

Type	Weight	Quantity	Part number
NT 27-M 8	0,008 kg/pcs.	100 pcs.	124382
NT 27-M10	0,010 kg/pcs.	100 pcs.	181577

Dimensions

Type	L
NT 27-M 8	13,5 mm
NT 27-M10	15 mm

Certification