Channel Lining SAL 27



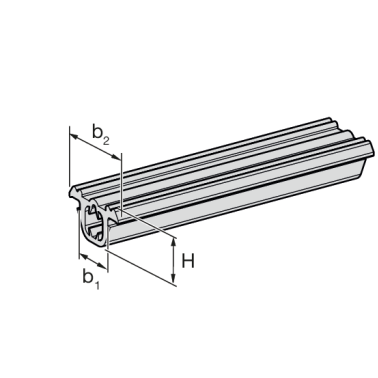

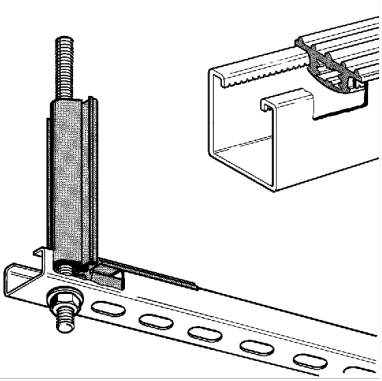

General Information

Sound absorption lining for inserting into Sikla Channels MS 27 or fitting around threaded rods; mainly for use in ducting systems, also for sound proof installations as per DIN 4109.

Installation

Thread connection: M8/M10

Temperature

Max. temperature	110 °C
Min. temperature	-50 °C

Material Properties

Hardness	50°+/-5° Shore
Halogen-free	0
UV-resistant	0

Material

Primary element material	SBR/EPDM

Fire Performance

Class B2 according to DIN 4102

Types

Type	Weight	Quantity	Part number
SAL 27 (CC)	0,206 kg/m	30 m	195963
SAL 27 L100 (CC)	0,028 kg/pcs.	100 pcs.	195970

Dimensions

Type	b1	b2	H
SAL 27 (CC)	16 mm	28 mm	4 mm
SAL 27 L100 (CC)	16 mm	28 mm	4 mm

Certification

epd-global
Powered by EPD-Norway