Slide Set GS CC H3G PL



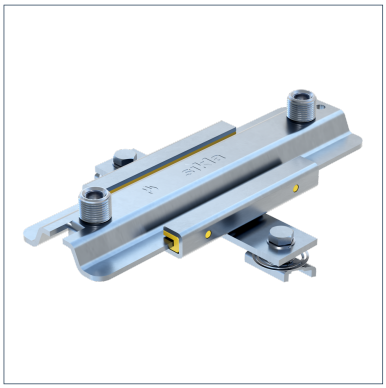

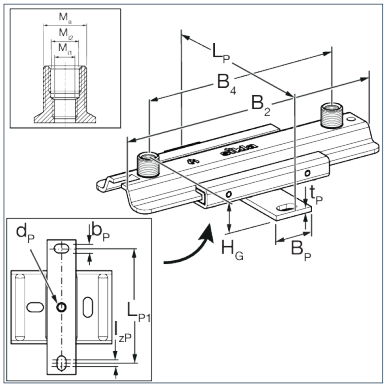

General Information

Heavy-duty Slide Set for plant construction to be used on Sikla Channels, brick or concrete walls and on bearers. To be used preferably in combination with pipe clamps Stabil D-3G, Ratio S and Chilled Water Clamp SKS. Various connection options of the pipe clamp depending on the respective load: M12, M16. In combination with 1/2'-adapters (see Adapter f/f) there are even further possibilities. Especially suitable for ceiling and floor mounting solutions and as a guide for rising pipes. Sound absorption due to slide rails in PPS glass fibre reinforced.

Installation

Locks automatically in the channel by pushing down the the bolt head, tighten - that's it!
For pipes of DN 100 or larger having to be spaced at a distance from the Slide Set, or under conditions of reversed bending stress, the 3G triple thread nut is to be secured by screwing on a 1/2" Locking Nut.
Lever L(max): 250 mm
Max. sliding distance Type CC - H3G-PL: 100 mm
Max. sliding distance Type CC - H3G2-PL: 135 mm

Temperature

Permissible long-term temperature	130 °C

Mechanical Properties

Static friction µ0	0,18

Material Properties

Halogen-free	0
UV-resistant	0

Material

Primary element material	steel
Sliding element material	PA
Connecting element material	steel
Surface finish	electro galvanized (Fe//Zn)
Corrosion protection class	C2

Forces

Type	-V{Z,perm.}	V{Z,perm.}
GS CC H3G - PL	5,00 kN	9,00 kN
GS CC H3G2 - PL	5,00 kN	9,00 kN

Note on loadings

The load capacity of the connecting parts used is to be considered. This applies particularly under stress of fire.

Fire resistance

Type	Fire Resistance 30 min	Fire Resistance 60 min	Fire Resistance 90 min	Fire Resistance 120 min
GS CC H3G - PL	1 kN	0,54 kN	0,36 kN	0,26 kN
GS CC H3G2 - PL	1 kN	0,54 kN	0,36 kN	0,26 kN

Types

Type	Max. lever arm	Max. slide path	Thread connection	Weight	Quantity	Part number
GS CC H3G - PL	250,00 mm	100,00 mm	M12/M16/1/2"	1,608 kg/ pcs.	10 pcs.	191747
GS CC H3G2 - PL	250,00 mm	135,00 mm	M12/M16/1/2"	1,947 kg/ pcs.	10 pcs.	191738

Dimensions

Type	B2	B4	BP	bP	dP	HG	LP	LP1	Ma	Mi1	Mi2	tP
GS CC H3G - PL	150 mm		40 mm	12,5 mm	13 mm	54,5 mm	188 mm	160 mm	1/2"	M12	M16	5 mm
GS CC H3G2 - PL	275 mm	210 mm	40 mm	12,5 mm	13 mm	54,5 mm	188 mm	160 mm	1/2"	M12	M16	5 mm

Certification