Channel MS 41 D HCP

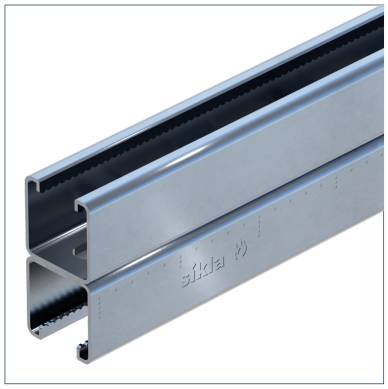

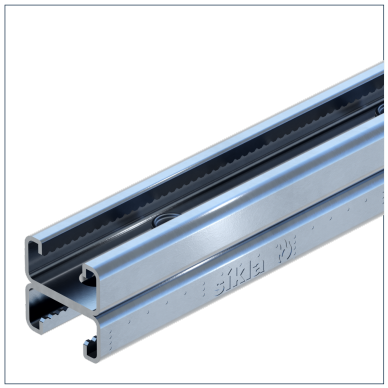

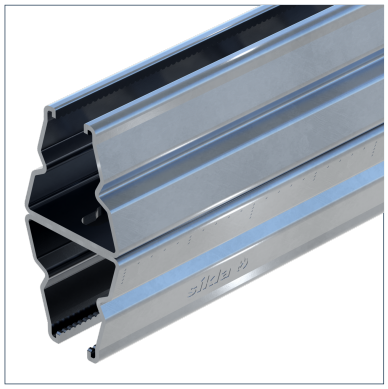

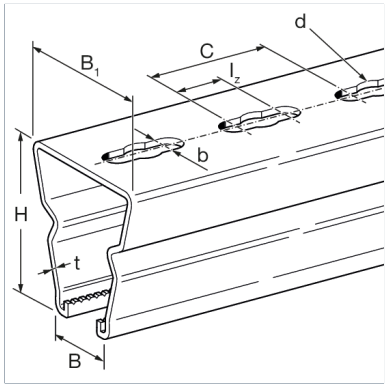

General Information

The Channel MS 41 D is a versatile element for technical building equipment and industrial plant construction. It is ideal for simple and professional manufacturing of crossbars, wall brackets and support frames. The internal serration and the possibility of combining it with siConnect system components such as the Slide Element GS 41, the Beam Clamp TCS 1, the T-Head Bolt TBO HZ and all other Sikla CC components, offer maximum flexibility during installation. The MS 41 D is available in various designs, for example as a trapezoidal channel for higher loads.

Installation

All Channels MS 41 hcp are serrated inside and provide numerous combination options with other high corrosion protected system components.

Mechanical Properties

Permissible yield strength f{y,perm.}	285,00 N/mm²
Permissible stress σ{perm.}	185,00 N/mm²

Material Properties

Halogen-free	0
UV-resistant	0

Material

Primary element material	steel
Surface finish	HCP
Corrosion protection class	C4

Forces

Type	V{Z,perm.}
MS 41/21/2,0 D 6M HCP	4,00 kN
MS 41/41/2,5 D 6M HCP	6,00 kN
MS 41-75/75/3,0 D 6M HCP	10,00 kN

Moments

Type	M{X,perm.}
MS 41/21/2,0 D 6M HCP	0,04 kNm
MS 41/41/2,5 D 6M HCP	0,04 kNm
MS 41-75/75/3,0 D 6M HCP	0,04 kNm

Channel MS 41 D HCP

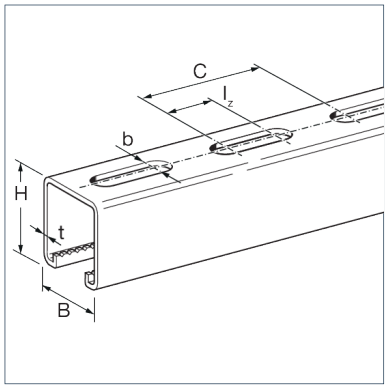

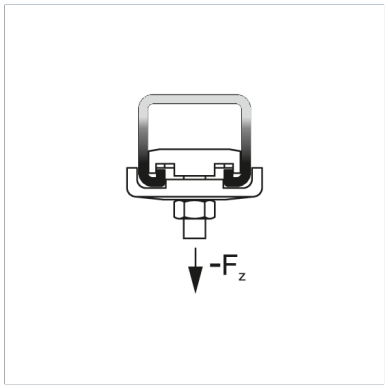

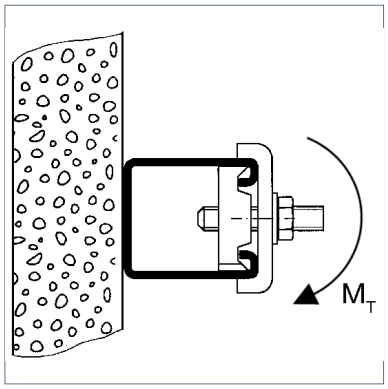

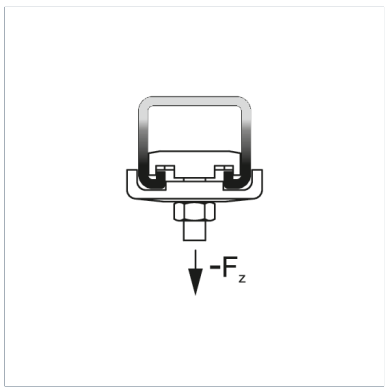

Cross-section values 1

Type	Elastic modulus Wy	Elastic modulus Wz	Second moment of area Iy	Second moment of area Iz	Radius of gyration iy	Radius of gyration iz
MS 41/21/2,0 D 6M HCP	2,35 cm³	4,22 cm³	4,94 cm^4	8,65 cm^4	1,24 cm	1,64 cm
MS 41/41/2,5 D 6M HCP	8,96 cm³	8,79 cm³	36,73 cm^4	18,03 cm^4	2,46 cm	1,72 cm
MS 41-75/75/3,0 D 6M HCP	30,66 cm³	22,83 cm³	230,02 cm^4	85,60 cm^4	4,07 cm	2,48 cm

Cross-section values 2

Type	Torsional constant It	Cross-sectional area A
MS 41/21/2,0 D 6M HCP	0,03 cm^4	3,20 cm²
MS 41/41/2,5 D 6M HCP	0,10 cm^4	6,06 cm²
MS 41-75/75/3,0 D 6M HCP	0,32 cm^4	13,84 cm²

Note on loadings

Note: All values refer to slotted channels.

Types

Type	L	Weight	Quantity	Part number
MS 41/21/2,0 D 6M HCP	6.000 mm	2,600 kg/m	6 m	193884
MS 41/41/2,5 D 6M HCP	6.000 mm	4,740 kg/m	6 m	166748
MS 41-75/75/3,0 D 6M HCP	6.000 mm	11,240 kg/m	6 m	173981

Dimensions

Type	B	b	B1	C	H	Iz	t
MS 41/21/2,0 D 6M HCP	41 mm	13 mm		62,5 mm	42 mm	27 mm	2 mm
MS 41/41/2,5 D 6M HCP	41 mm	13 mm		62,5 mm	82 mm	27 mm	2,5 mm
MS 41-75/75/3,0 D 6M HCP	41 mm	13 mm	75 mm	62,5 mm	150 mm	27 mm	3 mm

Certification

RAL GÜTEZEICHEN KORROSIONSSCHUTZ BESCHICHTUNG

Stahl

epd-global
Powered by EPD-Norway

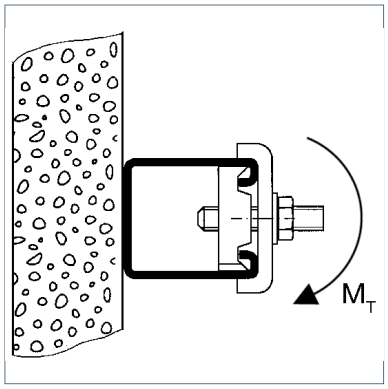
M_T

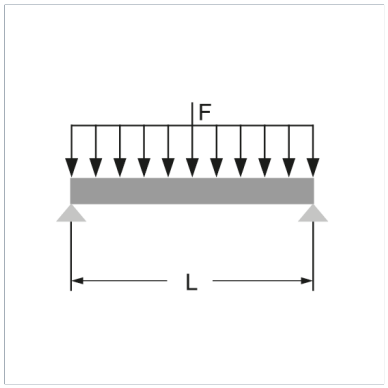
F
L