Angle Connector EV CC41-2 W HCP

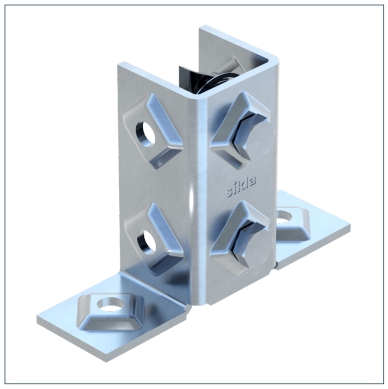

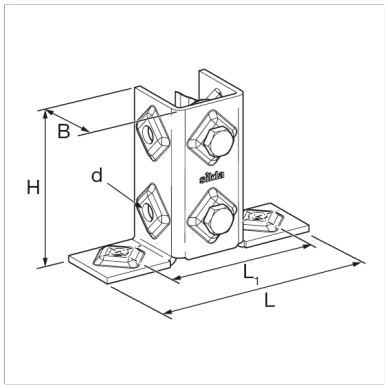

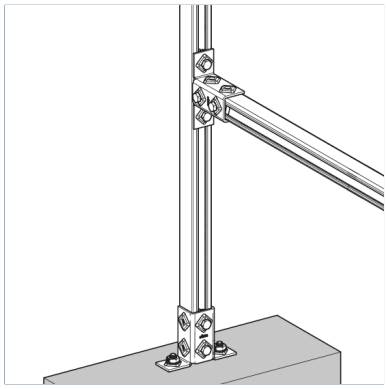

General Information

Pre-assembled connecting element for in HCP three-dimensional frame structures, optimised for linking channels of the 41 series at an angle of 90°. The adjustment for the channel opening could still be chosen. Fast-Technique for 90° joints of Channel System 41. Locks automatically when being put in place and supports its own weight. Secure, form-locking, non-positive connection. Serrated Channel Nut with Hexagon Bolt M10. Ideal shaping for high stiffness. The proven Sikla rhomb guarantees a secure torque and preload force.

Installation

To be used in pairs.
For channels rotated at 90°, only squarechannels 41/41 may be used (width of the mount: 41 mm).
Torque: 40 Nm

Material Properties

Halogen-free	0
UV-resistant	0

Material

Primary element material	steel
Connecting element material	steel
Surface finish	HCP
Corrosion protection class	C4

Forces

Type	-V{Z,perm.}	V{Z,perm.}
EV CC41-2 W HCP	10,00 kN	5,00 kN

Note on loadings

Specification per connector.

Types

Type	Weight	Quantity	Part number
EV CC41-2 W HCP	0,770 kg/pcs.	10 pcs.	117459

Dimensions

Type	B	d	H	L	L1
EV CC41-2 W HCP	45 mm	11 mm	101 mm	144 mm	99 mm

Certification

Documents

Sikla Angle Connector EV CC