Suspension Holding Bracket IR-RA

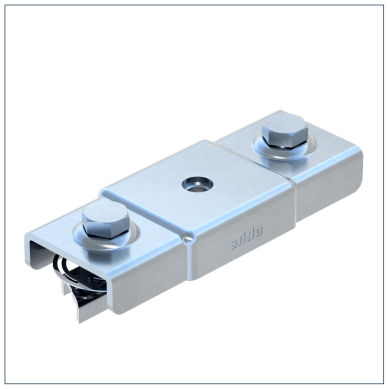

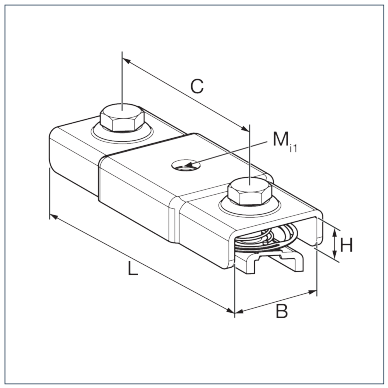

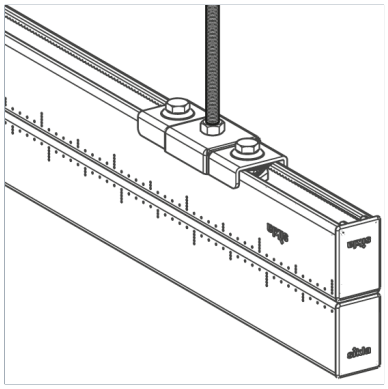

General Information

The Suspension Holding Bracket IR-RA is used to fix the ceiling grid or to fix Channels MS 41 by means of a threaded rod to the building structure. The two connecting points allow a high load transfer. The Pressix CC-components guarantee a simple and quick assembly.

Installation

Tightening torque: 15 Nm

Material Properties

Halogen-free	0
UV-resistant	0

Material

Primary element material	steel
Surface finish	electro galvanized (Fe//Zn)
Corrosion protection class	C2

Forces

Type	-V{Z,perm.}
IR-RA M10	12,00 kN

Types

Type	Weight	Quantity	Part number
IR-RA M10	0,361 kg/pcs.	25 pcs.	116967

Dimensions

Type	B	C	L	H	Mi1
IR-RA M10	41,5 mm	96 mm	135 mm	15 mm	M10

Certification