T-Bracket MOS MV 41



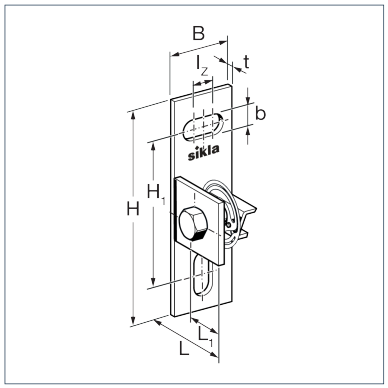

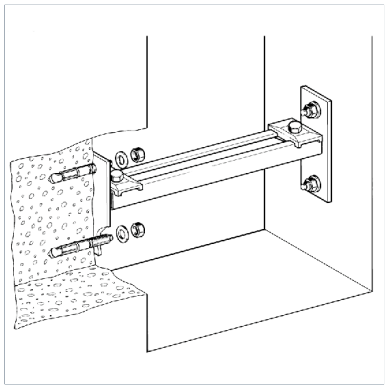

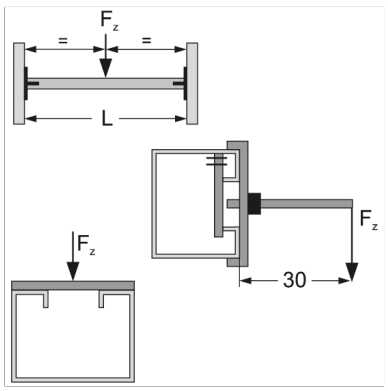

General Information

This T-Bracket serves as connecting element for cross bars between two channels. Note: For one cross bar always two T-Brackets should be used.

Installation

Per cross bar always two T-Brackets have to be used.

Material Properties

Halogen-free	0
UV-resistant	0

Material

Primary element material	steel
Surface finish	electro galvanized (Fe//Zn)
Corrosion protection class	C2

Types

Type	Weight	Quantity	Part number
MOS MV 41	0,270 kg/pcs.	10 pcs.	143794

Dimensions

Type	B	b	H	H1	L	L1	lz	t
MOS MV 41	40 mm	12,5 mm	135 mm	107 mm	51 mm	15 mm	8 mm	4 mm

Certification

Stahl

epd-global
Powered by EPD-Norway