T-Bracket MOS CC MH



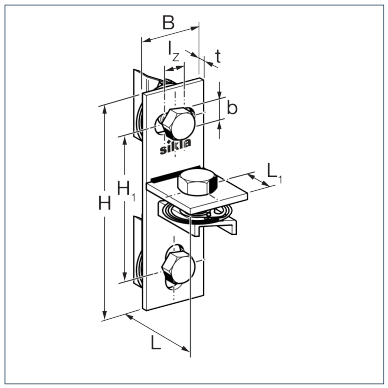

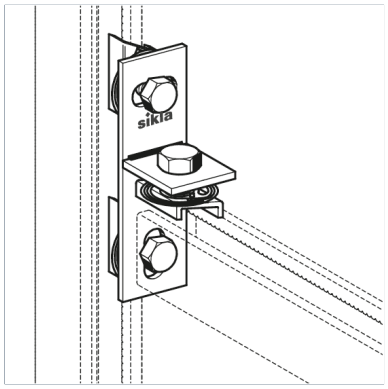

General Information

Connecting element for cross bars between two channels. Note: Per cross bar always two T-Brackets have to be used.

Installation

Per cross bar always two T-Brackets have to be used.
For channels 41/21 - 41/52

Material Properties

Halogen-free	0
UV-resistant	0

Material

Primary element material	steel
Surface finish	electro galvanized (Fe//Zn)
Corrosion protection class	C2

Types

Type	Weight	Quantity	Part number
MOS CC - MH 41	0,388 kg/pcs.	10 pcs.	191756

Dimensions

Type	B	b	H	H1	L	L1	lz	t
MOS CC - MH 41	40 mm	12,5 mm	135 mm	107 mm	51 mm	15 mm	8 mm	4 mm

Certification