Cross Tee IR-M

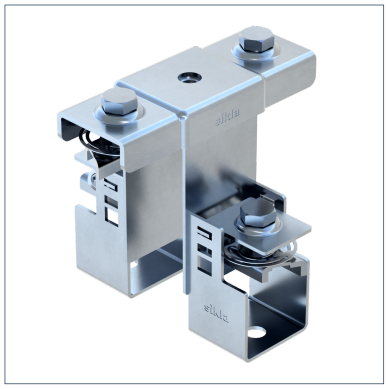

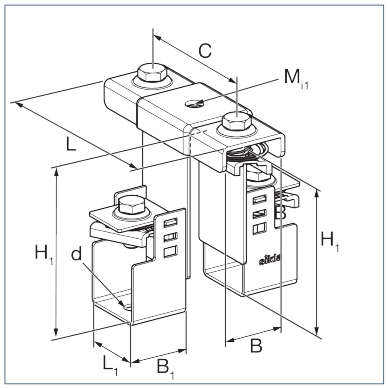

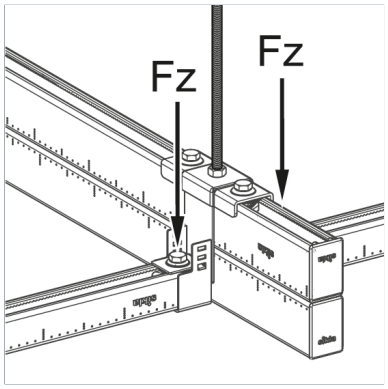

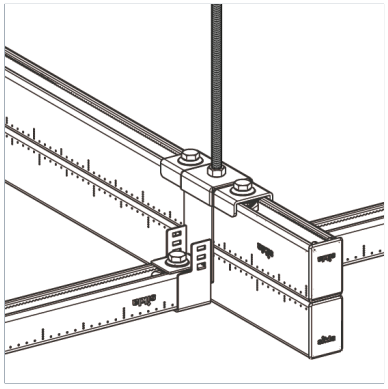

General Information

The Cross Tee IR-M is used to create a cross connection for installation grids made of Channels 41. In combination with Channels 41 and the End Tee IR-E a complete installation grid can be created. For the connection to the structure the Tension Tie Rod Disc IR, which enables a y-suspension, can be used if necessary. An installation grid system allows a cost- and time-saving adjustment of the pipe and cable supplies. New production process requirements can be implemented efficiently. Saving time by means of Pressix CC-components. Flexible choice of Channels. Simple modificaton of End and Cross Tees.

Installation

1. Mount both hooked feeder plates of the Cross Tee IR-M to the main runner.
2. Place the suspension holding bracket over both hooked feeder plates and tighten it.
3. Insert the cross strut section into the hooked feeder plates and fix it by means of the clamping plate, Speed Nut NT CC 41 and hexagon bolt.

Tightening torque: 10 Nm

Selection guide:

Type	appropriate main runner	appropriate cross strut section
IR-M 41/52 D	MS 41/52 D	MS 41/41, 41/52, 41/62
IR-M 41/62 D	MS 41/62 D	MS 41/41, 41/52, 41/62

Material Properties

Halogen-free	0
UV-resistant	0

Material

Primary element material	steel
Connecting element material	steel
Surface finish	electro galvanized (Fe//Zn)
Corrosion protection class	C2

Forces

Type	-V{Z,perm.}
IR-M 41/52D	6,00 kN
IR-M 41/62D	6,00 kN

Types

Type	Weight	Quantity	Part number
IR-M 41/52D	0,880 kg/pcs.	8 pcs.	116603
IR-M 41/62D	0,880 kg/pcs.	8 pcs.	116604

Dimensions

Type	B	B1	C	d	H1	L	L1	Mi1
IR-M 41/52D	41,5 mm	40 mm	96 mm	11 mm	104 mm	135 mm	43 mm	M10
IR-M 41/62D	41,5 mm	40 mm	96 mm	11 mm	124 mm	135 mm	43 mm	M10

Certification