Clamping Unit KL

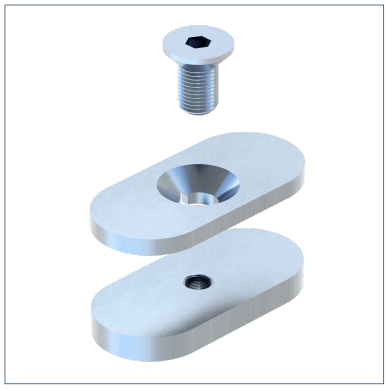

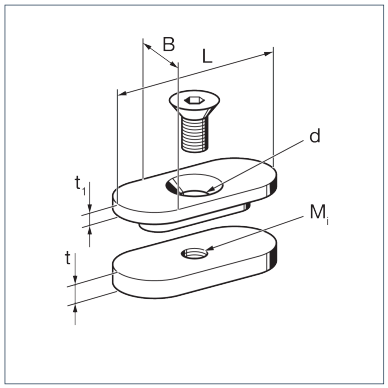

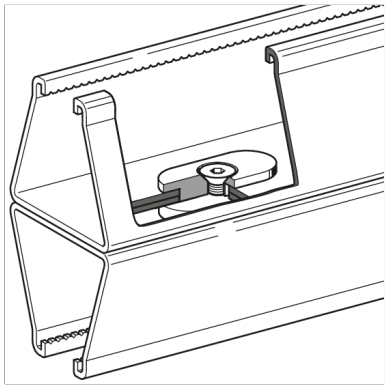

General Information

Used for assembling double channels made from Sikla Channels with slot pattern III or IV, i.e. with a minimum material thickness of 2.0 mm. This system could be used for pre-assembly in a workshop also. A torque wrench is required in order to ensure that the static values indicated on page 3-7 are achieved. Attention: These values are only guaranteed when using Sikla Channels.

Installation

Max. spacing between connecting points is 500 mm, with one point at each end of the channel section.
Required number of Clamping Units: channel 2m = 5 pcs., channel 6m = 13 pcs.
For Channel 41/21/2,0 no connecting elements, like channels nuts, etc. could be placed directly above the connectors.
Torque: M = 25 Nm
Suitable for Sikla Channels: 41/21/2.0 to 41-75/75/3.0

Material Properties

Halogen-free	0
UV-resistant	0

Material

Primary element material	cast steel
Connecting element material	steel
Surface finish	electro galvanized (Fe//Zn)
Corrosion protection class	C2

Note on loadings

Attention: These values are only guaranteed when using Sikla Channels.

Types

Type	Weight	Quantity	Part number
KL 1	0,115 kg/pcs.	50 pcs.	118055

Dimensions

Type	B	d	L	Mi	t	t1
KL 1	26 mm	9 mm	55 mm	M8	6 mm	4 mm

Certification

epd-global
Powered by EPD-Norway