Pivot Joint JOI 41 Z HCP

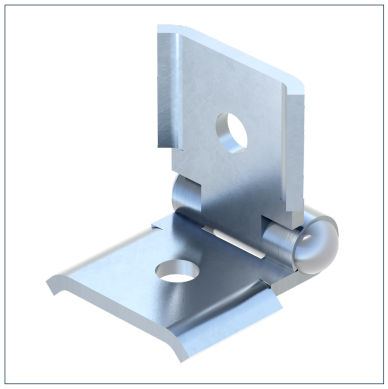

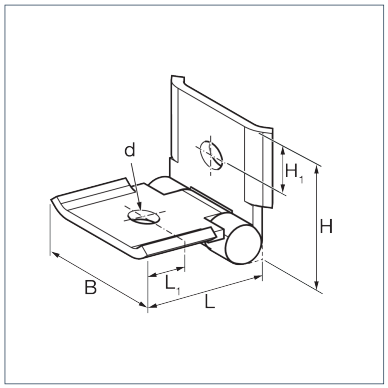

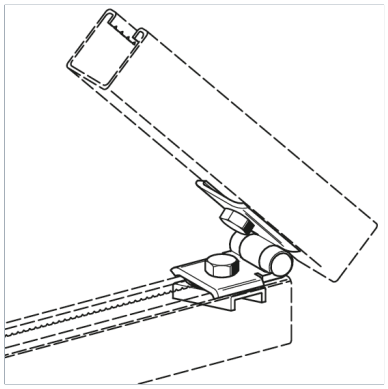

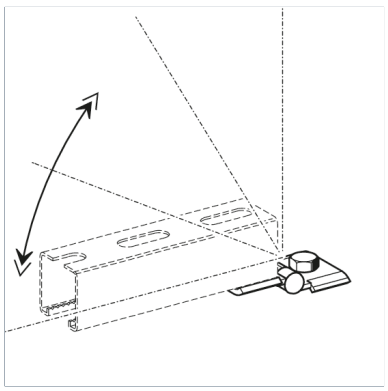

General Information

For connecting Channels MS 41 allowing for variable angle-adjustment ranging from 0° - 180°. Suitable for direct connection to the building structure and, in combination with channel, can be used as an angular support for bracketry.

Installation

Connecting possibilities:
Back of the channel with Channel Nut HZ 41 and screw
Opening of the channel with Speed Nut CC 41 and screw
Tightening torque: 50 Nm

Material Properties

Halogen-free	0
UV-resistant	0

Material

Primary element material	steel
Surface finish	HCP
Corrosion protection class	C4

Forces

Type	-V{Z,perm.}
JOI 41 Z HCP	2,00 kN

Note on loadings

Specification per connector.

Types

Type	Weight	Quantity	Part number
JOI 41 Z HCP	0,172 kg/pcs.	50 pcs.	199244

Dimensions

Type	B	d	H	H1	L	L1
JOI 41 Z HCP	48 mm	10,5 mm	54 mm	20 mm	54 mm	20 mm

Certification