Pivot Joint JOI 41 T HCP

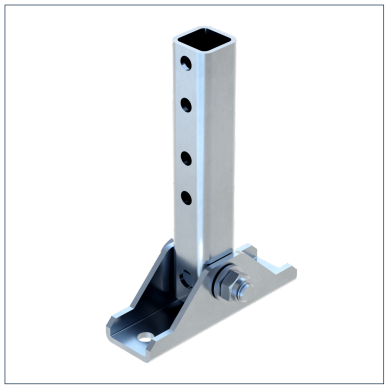

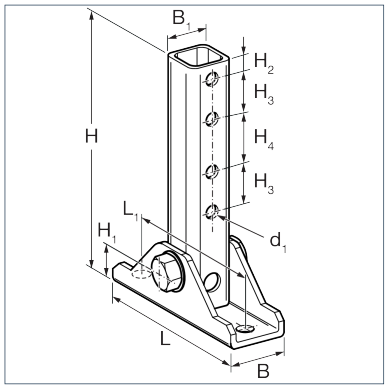

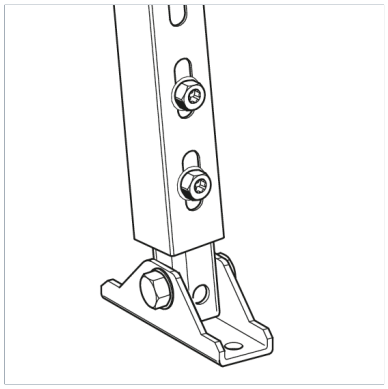

General Information

To be used for connecting Channels MS 41 to optionally bended structures such as tunnels, bended roof frames etc. under different angles. Especially suitable as brace support. Arrangement of the channel opening to all directions is possible.

Installation

Fixation to walls, ceiling and floors by means of dowels. Adjustment of angle during assembly. Easy, fast and secure assembly of the channel with two Self Forming Screws FLS F.

Material Properties

Halogen-free	0
UV-resistant	0

Material

Primary element material	steel
Surface finish	HCP
Corrosion protection class	C4

Forces

Type	-V{Z,perm.}
JOI 41 T HCP	4,40 kN

Types

Type	Weight	Quantity	Part number
JOI 41 T HCP	0,810 kg/pcs.	20 pcs.	197615

Dimensions

Type	B	B1	d1	H	H1	H2	H3	H4	L	L1
JOI 41 T HCP	39 mm	30 mm	9,1 mm	187 mm	30 mm	10 mm	27 mm	35,5 mm	130 mm	100 mm

Certification