Channel Nut NT HZ41

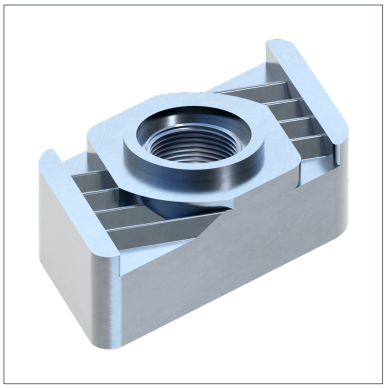

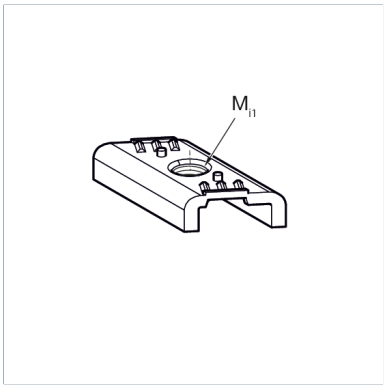

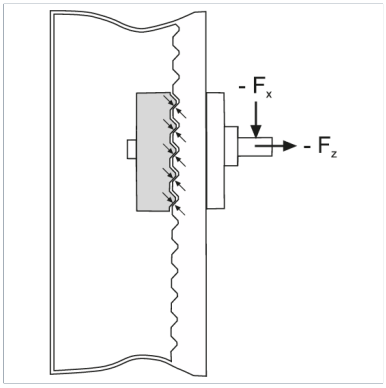

General Information

Channel Nut HZ 41 suitable for Channels MS 41.

Installation

	M8	M10	M12	M16
Tightening torque 8.8 [Nm]	25	40	80	80

Using lower steel classes, the value are to be reduced accordingly.

Material Properties

Halogen-free	0
UV-resistant	0

Material

Primary element material	steel
Surface finish	electro galvanized (Fe//Zn)
Corrosion protection class	C2

Forces

Type	V{X,perm.}	-V{Z,perm.}
NT HZ41-M 8	4,00 kN	7,50 kN
NT HZ41-M10	5,50 kN	7,50 kN
NT HZ41-M12	9,00 kN	10,00 kN
NT HZ41-M16	6,00 kN	10,00 kN

Note on loadings

The permissible load capacities of the channels are to be respected.

Types

Type	Weight	Quantity	Part number
NT HZ41-M 8	0,036 kg/pcs.	50 pcs.	151935
NT HZ41-M10	0,034 kg/pcs.	50 pcs.	151944
NT HZ41-M12	0,057 kg/pcs.	50 pcs.	182288
NT HZ41-M16	0,050 kg/pcs.	50 pcs.	182297

Dimensions

Type	Mi1
NT HZ41-M 8	M8

Type	Mi1
NT HZ41-M10	M10
NT HZ41-M12	M12
NT HZ41-M16	M16

Certification