Channel Nut NT 41

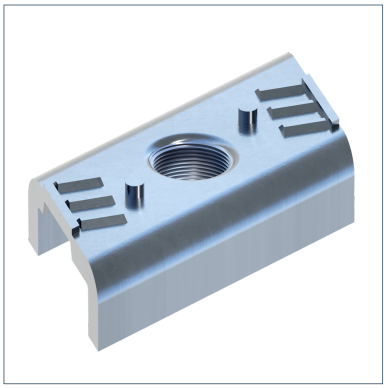

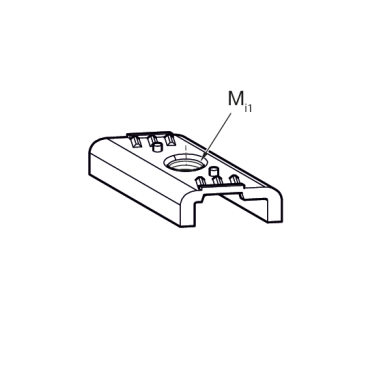

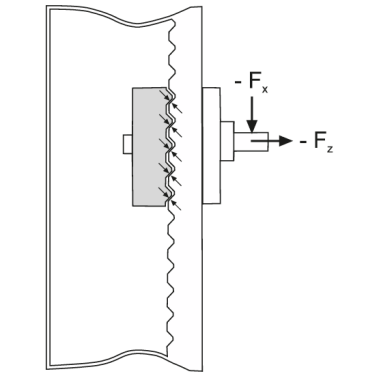

General Information

Channel Nuts NT 41 are suitable for Channels MS 41.

Installation

Tightening torques:

	M8	M10
Tightening torque 8.8 [Nm]	25	40

Using lower steel classes, the value are to be reduced accordingly.

Material Properties

Halogen-free	0
UV-resistant	0

Material

Primary element material	steel
Surface finish	electro galvanized (Fe//Zn)
Corrosion protection class	C2

Forces

Type	V{X,perm.}	-V{Z,perm.}
NT 41-M 8	2,10 kN	5,80 kN
NT 41-M10	3,40 kN	5,80 kN

Types

Type	Weight	Quantity	Part number
NT 41-M 8	0,026 kg/pcs.	50 pcs.	180173
NT 41-M10	0,024 kg/pcs.	50 pcs.	180182

Dimensions

Type	Mi1
NT 41-M 8	M8
NT 41-M10	M10

Certification

This product has been awarded the RAL quality mark "Pipe Supports" and is subject to continuous external monitoring according to RAL GZ-655.