# U Bolt Support UBF HCP

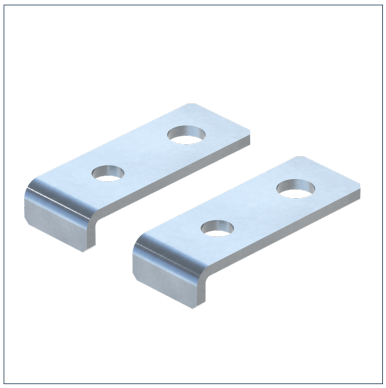

## General Information

For simple combination of U Bolt and Channel. Suitable for all Sikla Channels MS 41.

## Installation

Simple attachment with Channel Nuts M10 and Hexagon Bolts M10x25.
For each U bolt each one set has to be used.

## Material Properties

| | |
|---|---|
| Halogen-free | 0 |
| UV-resistant | 0 |

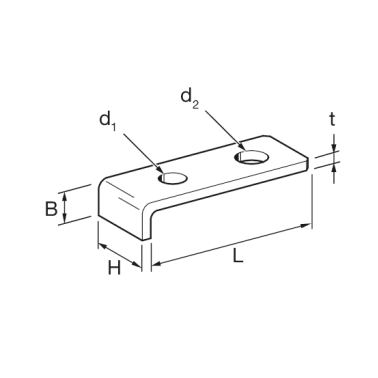


## Material

| | |
|---|---|
| Primary element material | steel |
| Surface finish | HCP |
| Corrosion protection class | C4 |

## Types

| Type | Weight | Quantity | Part number |
|---|---|---|---|
| UBF HCP | 0,152 kg/pair | 25 pair | 194188 |

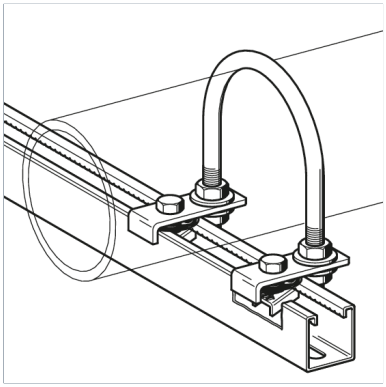

## Dimensions

| Type | B | d1 | d2 | H | L | t |
|---|---|---|---|---|---|---|
| UBF HCP | 15 mm | 11 mm | 13 mm | 30 mm | 75 mm | 4 mm |

## Certification

Stahl

epd-global
Powered by EPD-Norway

