Spacing Nut DIS So-WK

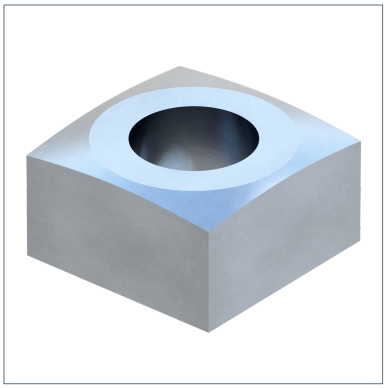

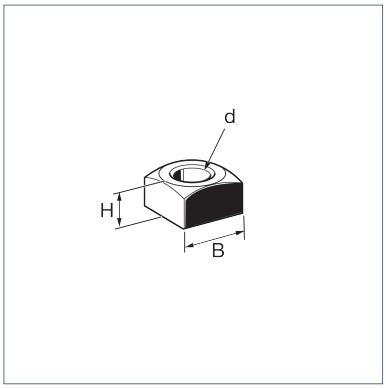

General Information

For safely installing Support Brackets of size 300/200 and 550/350 and optimising load distribution.

Material Properties

Halogen-free	0
UV-resistant	0

Material

Primary element material	steel
Surface finish	electro galvanized (Fe//Zn)
Corrosion protection class	C2

Types

Type	Weight	Quantity	Part number
DIS SO-WK	0,083 kg/pcs.	25 pcs.	114848

Dimensions

Type	B	d	H
DIS SO-WK	30 mm	16,5 mm	16 mm

Certification