T-Head Bolt HM 27

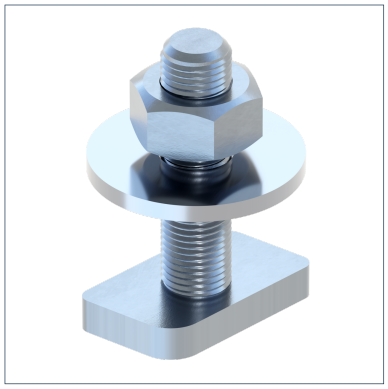

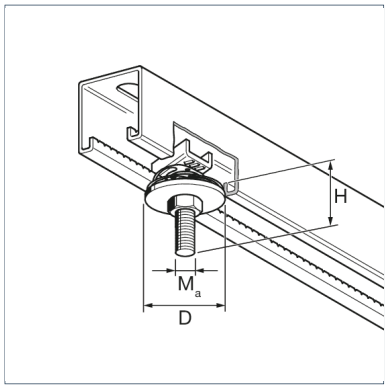

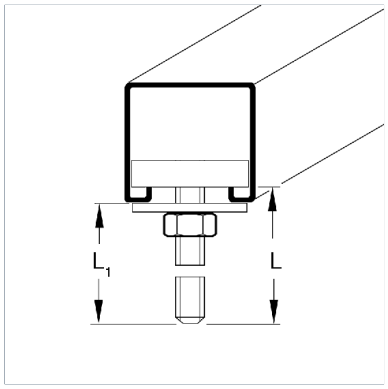

General Information

Suitable for Sikla Channels MS 27.

Material Properties

Halogen-free	0
UV-resistant	0

Material

Primary element material	steel
Surface finish	electro galvanized (Fe//Zn)
Corrosion protection class	C2

Types

Type	L	L_1	Weight	Quantity	Part number
HM 27 M 8 X 10/14	15,00 mm	10,00 mm	0,026 kg/pcs.	50 pcs.	106467
HM 27 M 8 X 15/14	20,00 mm	15,00 mm	0,027 kg/pcs.	50 pcs.	106476
HM 27 M 8 X 25/14	30,00 mm	25,00 mm	0,029 kg/pcs.	50 pcs.	106485
HM 27 M10 X 15/14	20,00 mm	15,00 mm	0,035 kg/pcs.	50 pcs.	106494
HM 27 M10 X 25/14	30,00 mm	25,00 mm	0,041 kg/pcs.	50 pcs.	106500

Dimensions

Type	D	H	Ma
HM 27 M 8 X 10/14	24 mm	15 mm	M8
HM 27 M 8 X 15/14	24 mm	20 mm	M8
HM 27 M 8 X 25/14	24 mm	30 mm	M8
HM 27 M10 X 15/14	24 mm	20 mm	M10
HM 27 M10 X 25/14	24 mm	30 mm	M10

Certification

Stahl

epd-global
Powered by EPD-Norway