Sound Absorption Element SDE 41

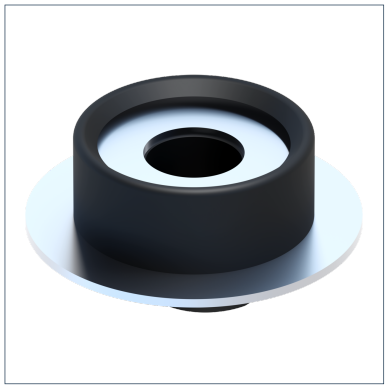

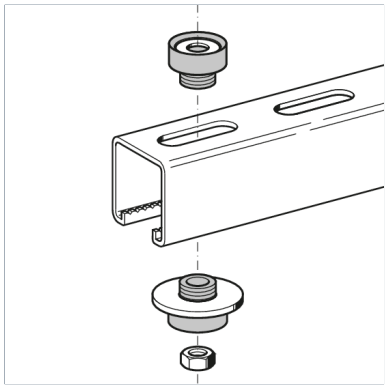

General Information

Sound Absorption Element for use in combination with Sikla Channels in ducting systems (suitable also for sound proof requirements according to DIN 4109).

Temperature

Max. temperature	110 °C
Min. temperature	-50 °C

Material Properties

Hardness	50°+/-5° Shore
Halogen-free	0
UV-resistant	0

Material

Isolating element material	TPE

Forces

Type	-V{X,perm.}	V{X,perm.}
SDE TYP 41	0,30 kN	0,30 kN

Fire Performance

Class B2 according to DIN 4102

Types

Type	Weight	Quantity	Part number
SDE TYP 41	0,015 kg/pcs.	100 pcs.	107802

Certification

epd-global
Powered by EPD-Norway