Assembly Group BG13 MS 41-1/2'' HCP

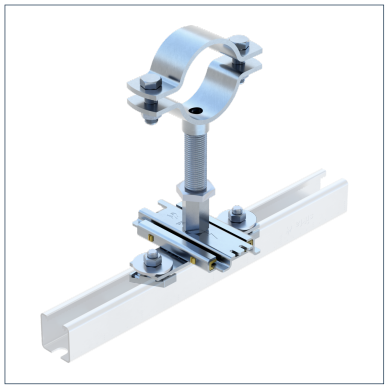



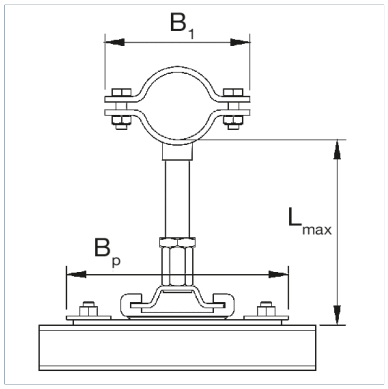

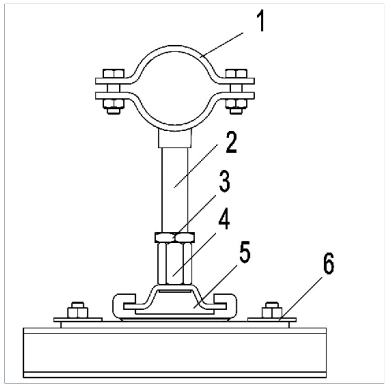

General Information

An Assembly Group for use as a guided support with the heavy Pipe Clamp Stabil I-1/2'. The Assembly Group is designed for use with the Sikla 41 MS channel system. The height is adjusted via the Threaded Tube 1/2'. From DN 65 upwards, the Slide Set GS H3G2-PL is used to create two pipe supports.

Installation

The assembly of the individual components to form an Assembly Group is carried out during the course of pipe installation on the construction site.

L(max, horizontal) = not recommended

Material Properties

Halogen-free	0
UV-resistant	0

Material

Primary element material	steel
Sliding element material	steel
Connecting element material	steel
Surface finish	electro galvanized (Fe//Zn) HCP
Corrosion protection class	C4

Types

Type	Size min.	Size max.	DN	Weight	Quantity	Part number
BG13 MS 41-1/2'' DN 15 HCP	16,00 mm	22,00 mm	DN 15 (1/2")	2,190 kg/pcs.	1 pcs.	110191
BG13 MS 41-1/2'' DN 20 HCP	23,00 mm	27,00 mm	DN 20 (3/4")	2,200 kg/pcs.	1 pcs.	110192
BG13 MS 41-1/2'' DN 25 HCP	30,00 mm	34,00 mm	DN 25 (1")	2,230 kg/pcs.	1 pcs.	110193
BG13 MS 41-1/2'' DN 32 HCP	39,00 mm	44,00 mm	DN 32 (1 1/4")	2,250 kg/pcs.	1 pcs.	110194
BG13 MS 41-1/2'' DN 40 HCP	44,00 mm	49,00 mm	DN 40 (1 1/2")	2,320 kg/pcs.	1 pcs.	110195
BG13 MS 41-1/2'' DN 50 HCP	57,00 mm	61,00 mm	DN 50 (2")	2,510 kg/pcs.	1 pcs.	110196
BG13 MS 41-1/2'' DN 65 HCP	73,00 mm	77,00 mm	DN 65 (2 1/2")	4,010 kg/pcs.	1 pcs.	110197
BG13 MS 41-1/2'' DN 80 HCP	85,00 mm	89,00 mm	DN 80 (3")	4,130 kg/pcs.	1 pcs.	110198
BG13 MS 41-1/2'' DN 100 HCP	109,00 mm	116,00 mm	DN 100 (4")	4,710 kg/pcs.	1 pcs.	110199

Assembly Group BG13 MS 41-1/2'' HCP

Dimensions

Type	B1	BP	Lmax
BG13 MS 41-1/2'' DN 15 HCP	85 mm	190 mm	200 mm
BG13 MS 41-1/2'' DN 20 HCP	92 mm	190 mm	200 mm
BG13 MS 41-1/2'' DN 25 HCP	100 mm	190 mm	200 mm
BG13 MS 41-1/2'' DN 32 HCP	112 mm	190 mm	200 mm
BG13 MS 41-1/2'' DN 40 HCP	117 mm	190 mm	200 mm
BG13 MS 41-1/2'' DN 50 HCP	139 mm	190 mm	200 mm
BG13 MS 41-1/2'' DN 65 HCP	156 mm	190 mm	200 mm
BG13 MS 41-1/2'' DN 80 HCP	168 mm	190 mm	200 mm
BG13 MS 41-1/2'' DN 100 HCP	194 mm	190 mm	200 mm

Certification