Pipe Shoe LK-HV 150 HCP

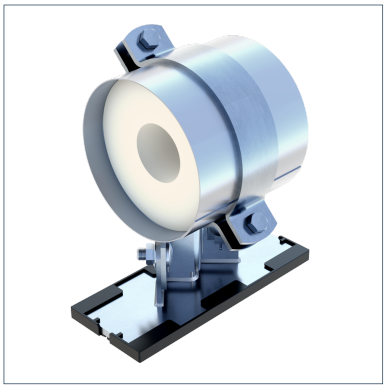

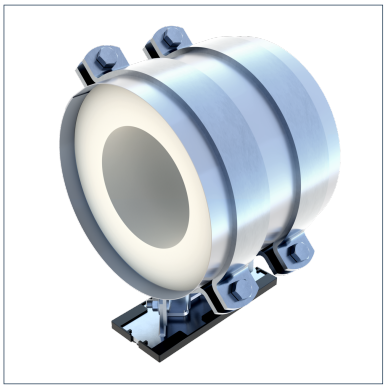

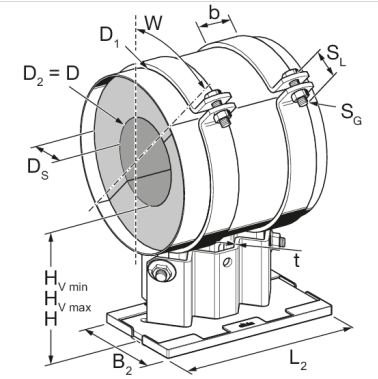

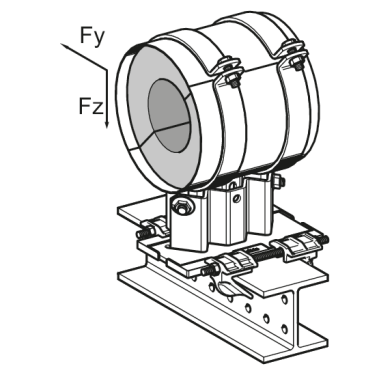

General Information

Pipe Shoe with insulation. With PUR insulation insert for pipes on suitable surfaces. Height-adjustable in steps of 2.5 mm. When resting on steel beams, a minimum flange width of 80 mm is recommended.

Installation

NB	Form	Height H as delivered [mm]	Height H range [mm]
DN 25 - 50	Single clamp	150	137,5 ... 167,5
DN 65 - 80	Single clamp	150	147,5 ... 177,5
DN 100 - 250	Double clamp	150	150 ... 180
DN 300	Double clamp	150	150 ... 160

The laying rules of DIN 4140 have to be respected (existing gaps have to be sealed by means of sealing paste if necessary).

Tightening torque screw connections:

Clamping bolts	tightening torque [Nm]	height adjustment	tightening torque [Nm]
DN 25 - 80	25	bolts in the bar	80
DN 100 - 300	30	bolts in the bar	80

Temperature

Max. temperature insulation	120 °C
Min. temperature insulation	-70 °C
Max. temperature sliding element	130 °C
Min. temperature sliding element	-20 °C

Mechanical Properties

Pipe shoe static coefficient of friction u (without sliding plate) - siFramo and siMotec	0,3

Material Properties

Halogen-free	0
UV-resistant	0

Material

Primary element material	steel

Isolating element material	PUR
Sliding element material	PA 6.0
Connecting element material	steel
Surface finish	HCP
Corrosion protection class	C4

Fire Performance

Class EL according to DIN EN 13501-1

Additional information

Also available with DualShield for high corrosion protection within C5H environments. Minimum quantities must be observed for pipe shoes outside the DN range. In addition, delivery times apply for these items on request.

Types

Type	Size min.	Size max.	DN	Weight	Quantity	Part number
LK-HV 150 DN 25 (1'') HCP	30.00 mm	34.00 mm	DN 25 (1")	4.180 kg/ pcs.	1 pcs.	110110
LK-HV 150 DN 32 (1 1/4'') HCP	40.00 mm	44.00 mm	DN 32 (1 1/4")	4.230 kg/ pcs.	1 pcs.	110111
LK-HV 150 DN 40 (1 1/2") HCP	45.00 mm	49.00 mm	DN 40 (1 1/2")	4.270 kg/ pcs.	1 pcs.	110112
LK-HV 150 DN 50 (2'') HCP	57.00 mm	61.00 mm	DN 50 (2")	4.400 kg/ pcs.	1 pcs.	110113
LK-HV 150 DN 65 (2 1/2'') HCP	72.00 mm	77.00 mm	DN 65 (2 1/2")	6.200 kg/ pcs.	1 pcs.	110114
LK-HV 150 DN 80 (3'') HCP	84.00 mm	89.00 mm	DN 80 (3")	6.600 kg/ pcs.	1 pcs.	110115
LK-HV 150 DN 100 (4'') HCP	109.00 mm	115.00 mm	DN 100 (4")	12.000 kg/ pcs.	1 pcs.	110116
LK-HV 150 DN 125 (5'') HCP	134.00 mm	140.00 mm	DN 125 (5")	13.900 kg/ pcs.	1 pcs.	110117
LK-HV 150 DN 150 (6'') HCP	163.00 mm	169.00 mm	DN 150 (6")	14.500 kg/ pcs.	1 pcs.	110118
LK-HV 150 DN 200 (8'') HCP	215.00 mm	221.00 mm	DN 200 (8")	16.600 kg/ pcs.	1 pcs.	110119
LK-HV 150 DN 250 (10'') HCP	266.00 mm	273.00 mm	DN 250 (10")	18.600 kg/ pcs.	1 pcs.	110120
LK-HV 150 DN 300 (12'') HCP	317.00 mm	324.00 mm	DN 300 (12")	24.200 kg/ pcs.	1 pcs.	110121

Pipe Shoe LK-HV 150 HCP

Dimensions

Type	b	B2	D	D1	D2	DS	H	HV min	HV max	L2	SG	SL	t	W
LK-HV 150 DN 25 (1'') HCP	50 mm	105 mm	33.7 mm	140 mm	33.7 mm	50 mm	150 mm	137.5 mm	167.5 mm	255.6 mm	M12	50 mm	5 mm	45°
LK-HV 150 DN 32 (1 1/4'') HCP	50 mm	105 mm	42.4 mm	146 mm	42.4 mm	50 mm	150 mm	137.5 mm	167.5 mm	255.6 mm	M12	50 mm	5 mm	45°
LK-HV 150 DN 40 (1 1/2") HCP	50 mm	105 mm	48.3 mm	152 mm	48.3 mm	50 mm	150 mm	137.5 mm	167.5 mm	255.6 mm	M12	50 mm	5 mm	45°
LK-HV 150 DN 50 (2'') HCP	50 mm	105 mm	60.3 mm	163 mm	60.3 mm	50 mm	150 mm	137.5 mm	167.5 mm	255.6 mm	M12	50 mm	5 mm	45°
LK-HV 150 DN 65 (2 1/2'') HCP	50 mm	105 mm	76.1 mm	200 mm	76.1 mm	60 mm	150 mm	147.5 mm	177.5 mm	255.6 mm	M12	55 mm	5 mm	45°
LK-HV 150 DN 80 (3'') HCP	50 mm	105 mm	88.9 mm	214 mm	88.9 mm	60 mm	150 mm	147.5 mm	177.5 mm	255.6 mm	M12	55 mm	5 mm	45°
LK-HV 150 DN 100 (4'') HCP	50 mm	105 mm	114.3 mm	237 mm	114.3 mm	60 mm	150 mm	150 mm	180 mm	255.6 mm	M12	55 mm	5 mm	45°
LK-HV 150 DN 125 (5'') HCP	50 mm	105 mm	139.7 mm	262 mm	139.7 mm	60 mm	150 mm	150 mm	180 mm	255.6 mm	M12	55 mm	5 mm	45°
LK-HV 150 DN 150 (6'') HCP	60 mm	105 mm	168.3 mm	291 mm	168.3 mm	60 mm	150 mm	150 mm	180 mm	255.6 mm	M16	60 mm	5 mm	45°
LK-HV 150 DN 200 (8'') HCP	60 mm	105 mm	219.1 mm	342 mm	219.1 mm	60 mm	150 mm	150 mm	180 mm	255.6 mm	M16	60 mm	5 mm	45°
LK-HV 150 DN 250 (10'') HCP	60 mm	105 mm	273 mm	396 mm	273 mm	60 mm	150 mm	150 mm	180 mm	255.6 mm	M16	60 mm	5 mm	45°
LK-HV 150 DN 300 (12'') HCP	70 mm	105 mm	323.9 mm	487 mm	323.9 mm	80 mm	150 mm	150 mm	160 mm	255.6 mm	M16	65 mm	5 mm	45°

Certification