Slide Set GS 2G PL A4

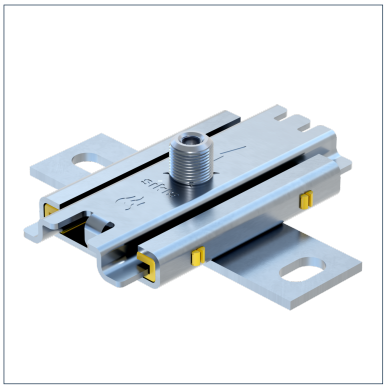

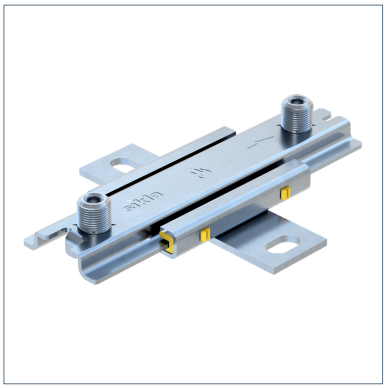

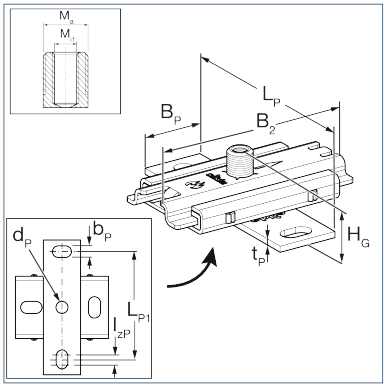

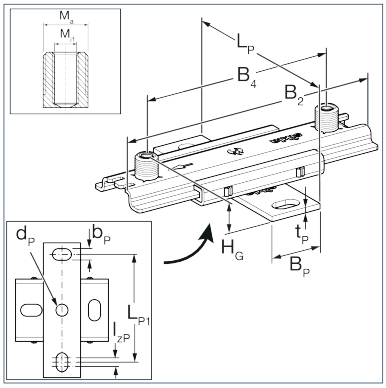

General Information

Slide Set for single and double mounting of mechanical equipment, to be used on Sikla Channels, brick or concrete walls and on bearers. To be used preferably in combination with Sikla Pipe Clamps Stabil D-2G ss. Various connection options with these pipe clamps ranging between M10 and R 1' using adapters (see Adapters AD f/f ss). Sound absorption by means of glass fibre reinforced PA.

Installation

Max. sliding distance Type 2G-PL: 85 mm
Max. sliding distance Type 2G2-PL: 140 mm

Temperature

Permissible long-term temperature	130 °C

Mechanical Properties

Static friction µ0	0,18

Material Properties

Halogen-free	0
UV-resistant	0

Material

Primary element material	Stainless Steel A4
Sliding element material	PA
Corrosion protection class	CRC II – III (C4 – C5 acc. to DIN EN ISO 12944-2)

Forces

Type	-V{Z,perm.}	V{Z,perm.}
GS 2G - PL A4	0.60 kN	1.20 kN
GS 2G2 - PL A4	0.60 kN	1.20 kN

Types

Type	Max. lever arm	Max. slide path	Thread connection	Weight	Quantity	Part number
GS 2G - PL A4	150.00 mm	85.00 mm	M10/M16	0.530 kg/ pcs.	25 pcs.	170170
GS 2G2 - PL A4	150.00 mm	140.00 mm	M10/M16	0.644 kg/ pcs.	25 pcs.	170198

Slide Set GS 2G PL A4

Dimensions

Type	B2	B4	BP	bP	dP	HG	LP	LP1	Ma	Mi1	tP
GS 2G - PL A4	130 mm		40 mm	12.5 mm	13 mm	39 mm	145 mm	116 mm	M16	M10	4 mm
GS 2G2 - PL A4	200 mm	150 mm	40 mm	12.5 mm	13 mm	39 mm	145 mm	116 mm	M16	M10	4 mm

Certification