Slide Set GS 2G ULTRAGLIDE

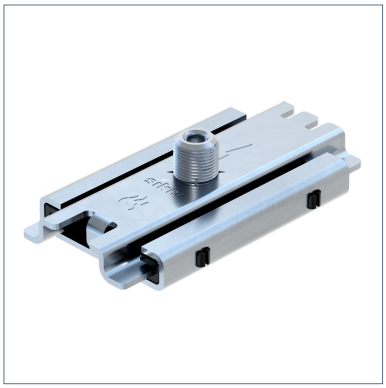

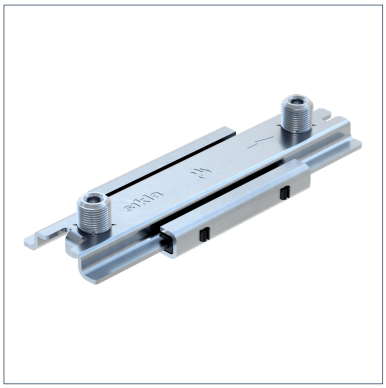

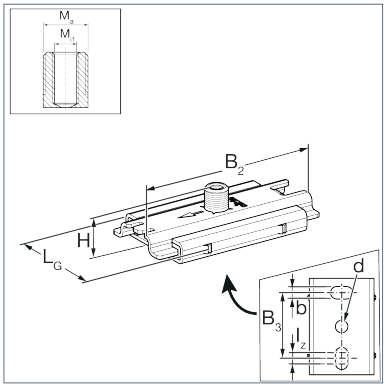

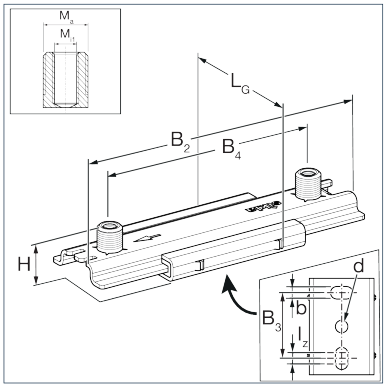

General Information

Slide Set for single and double mounting of mechanical equipment. To be used preferably in combination with Sikla Pipe Clamps Ratio S and Stabil D-3G. Various connection options with these pipe clamps ranging between M10 and R1'. For adapters for these connection options (see Adapter AD f/f). Sound absorption by means of glass fibre reinforced PA slide rails. When using the version ULTRAglide the resultant shear force is halved. By this the realisation of optimized supporting structures is possible.

Temperature

Permissible long-term temperature	130 °C

Mechanical Properties

Static friction µ0	0,07

Material Properties

Halogen-free	0
UV-resistant	0

Material

Primary element material	steel
Sliding element material	PA GF Nano-coated
Surface finish	electro galvanized (Fe//Zn)
Corrosion protection class	C2

Forces

Type	-V{Z,perm.}	V{Z,perm.}
GS ULTRAGLIDE 2G	0.60 kN	1.20 kN
GS ULTRAGLIDE 2G2	0.60 kN	1.20 kN

Note on loadings

The load capacity of the connecting parts used is to be considered. This applies particularly under stress of fire.

Fire resistance

Type	Fire Resistance 30 min	Fire Resistance 60 min	Fire Resistance 90 min	Fire Resistance 120 min
GS ULTRAGLIDE 2G	0.6 kN	0.43 kN	0.28 kN	0.2 kN

Slide Set GS 2G ULTRAGLIDE

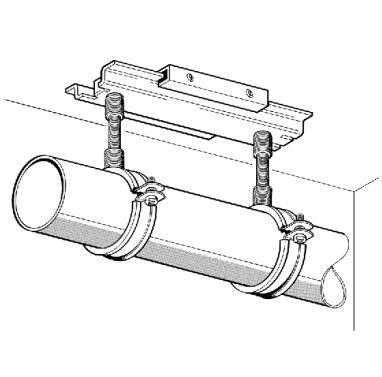

Type	Fire Resistance 30 min	Fire Resistance 60 min	Fire Resistance 90 min	Fire Resistance 120 min
GS ULTRAGLIDE 2G2	0.6 kN	0.43 kN	0.28 kN	0.2 kN

Types

Type	Max. lever arm	Max. slide path	Thread connection	Weight	Quantity	Part number
GS ULTRAGLIDE 2G	300.00 mm	85.00 mm	M10/M16	0.385 kg/ pcs.	25 pcs.	110582
GS ULTRAGLIDE 2G2	300.00 mm	140.00 mm	M10/M16	0.498 kg/ pcs.	25 pcs.	110584

Dimensions

Type	b	B2	B3	B4	d	LG	H	lz	Ma	Mi1
GS ULTRAGLIDE 2G	13 mm	130 mm	68 mm		13 mm	71 mm	35 mm	10 mm	M16	M10
GS ULTRAGLIDE 2G2	13 mm	200 mm	68 mm	150 mm	13 mm	71 mm	35 mm	10 mm	M16	M10

Certification