Ducting Angle LUW A-L

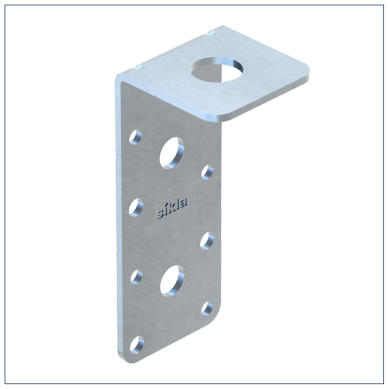

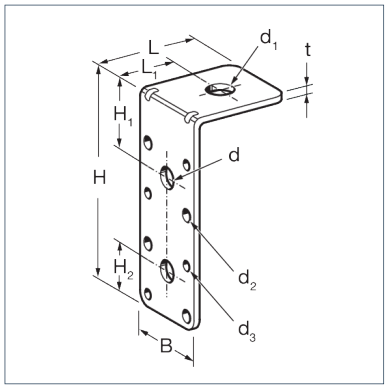

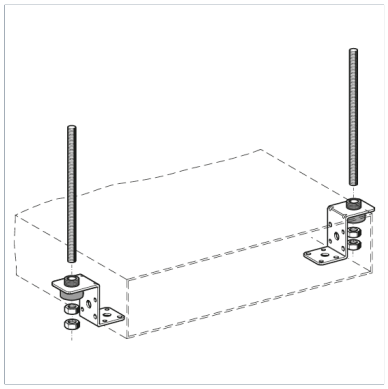

General Information

Mounting Angle for rectangular ducts installed directly under the ceiling, or for suspended installation when using a threaded rod.

Installation

Fixing to the duct with rivets (ø 4 - 5 mm), sheet metal screws (ø 4 - 5 mm) or M8 bolts.
Connection to building structure: M8/M10

Material Properties

Halogen-free	0
UV-resistant	0

Material

Primary element material	steel
Surface finish	electro galvanized (Fe//Zn)
Corrosion protection class	C2

Forces

Type	-V{Z,perm.}
LUW A-L	0.50 kN

Types

Type	Weight	Quantity	Part number
LUW A-L	0.055 kg/pcs.	100 pcs.	110496

Dimensions

Type	B	d	d1	d2	d3	H	H1	H2	L	L1	t
LUW A-L	35 mm	8.5 mm	10.5 mm	4.2 mm	5 mm	85 mm	29.5 mm	18.5 mm	35 mm	17.5 mm	2 mm

Certification