Round Rod Coupling AD IG/IG HCP

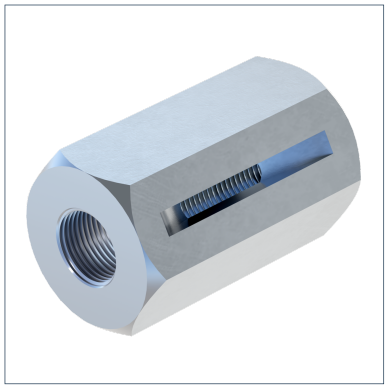

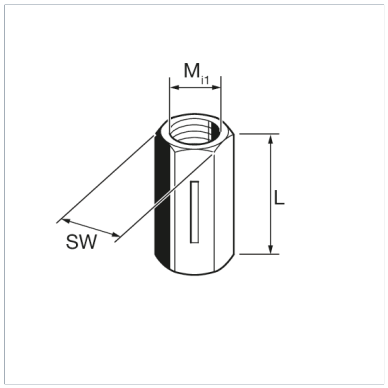

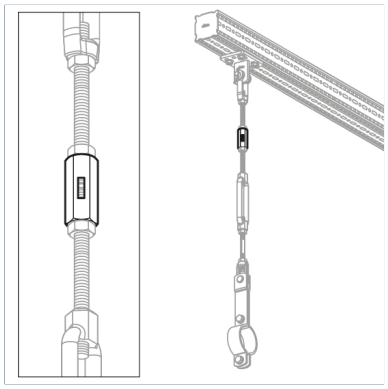

General Information

Connection element to extend threaded rods for suspension heights of Sikla Load Chains of more than 3 meters effective length of thread. With slot for visual check of screw depth of both ends of the threaded rods. The HCP-surface of the Rod Coupling in combination with other HCP-components guarantees a consistent corrosion protection for all individual parts. During assembly the Rod Coupling has to be locked with two hexagon nuts (not included in scope of delivery).

Installation

During assembly the Rod Coupling has to be locked with two hexagon nuts (not included in scope of delivery).

Material Properties

Halogen-free	0
UV-resistant	0

Material

Primary element material	steel
Surface finish	HCP
Corrosion protection class	C4

Forces

Type	-V{Z,perm.}
AD IG/IG M10 X 30 HCP	18.60 kN
AD IG/IG M12 X 35 HCP	27.00 kN
AD IG/IG M16 X 40 HCP	39.20 kN

Types

Type	Weight	Quantity	Part number
AD IG/IG M10 X 30 HCP	0.042 kg/pcs.	100 pcs.	116700
AD IG/IG M12 X 35 HCP	0.040 kg/pcs.	50 pcs.	116701
AD IG/IG M16 X 40 HCP	0.075 kg/pcs.	50 pcs.	116702

Dimensions

Type	L	Mi1	SW
AD IG/IG M10 X 30 HCP	30 mm	M10	17 mm
AD IG/IG M12 X 35 HCP	35 mm	M12	17 mm
AD IG/IG M16 X 40 HCP	40 mm	M16	22 mm

Certification