Toggle Stud KD

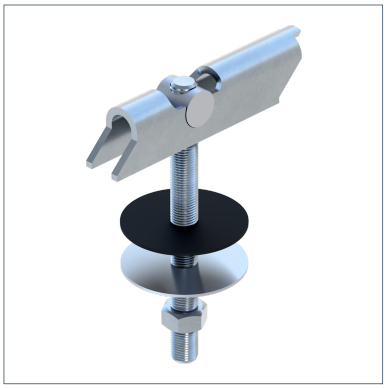

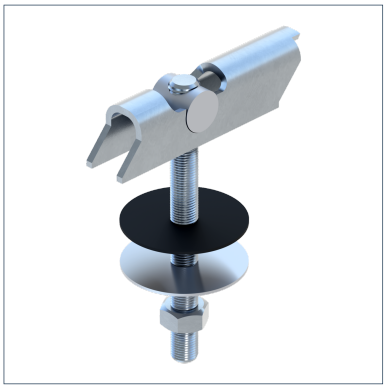

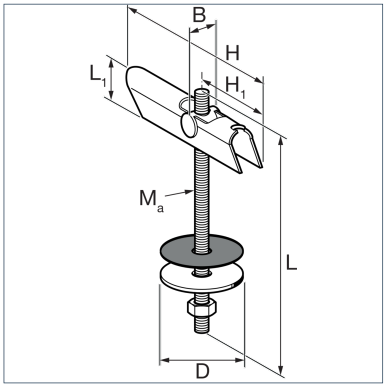

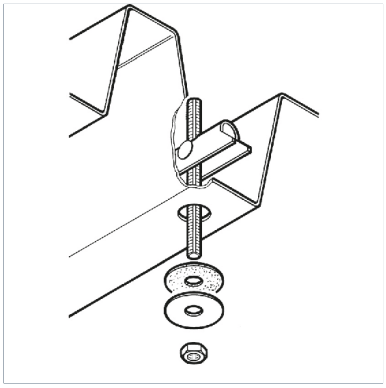

General Information

For fixing pipes up to a nominal diameter of DN 50 directly to ceilings made of trapezoidal corrugated sheet according to VdS/FM standards or as single point mounting solution. In cases where VdS or FM regulations are not applicable or in cases of ventilation systems, larger loads may be fixed via crossbars and by an appropriate number of toggle studs. By turning the threaded rod, it is possible to make height adjustments. This threaded rod is secured and cannot be unscrewed completely. The Hypalon washer is weather-resistant and thus a crucial safety factor when sealing the mounting bore.

Installation

For the installation hole in the trapezoidal sheet the Hole Saw LS is to be used: Type M8 = LS 22, type TD10 = LS 25.

Material Properties

Halogen-free	0
UV-resistant	0

Material

Primary element material	steel
Isolating element material	EPDM
Surface finish	electro galvanized (Fe//Zn)
Corrosion protection class	C2

Note on loadings

Permissible carrying capacity of the trapezoidal sheet has to be considered.

Types

Type	Thread connection	Weight	Quantity	Part number
KD M 8X 100	M8 (VdS)	0.110 kg/pcs.	100 pcs.	113810
KD TD M10X 100	M10 (FM)	0.130 kg/pcs.	100 pcs.	126065
KD TD M10X 200	M10 (FM)	0.186 kg/pcs.	50 pcs.	125578

Dimensions

Type	B	D	H	H1	L	L1	Ma
KD M 8X 100	14 mm	40 mm	84 mm	35 mm	100 mm	19.25 mm	M8
KD TD M10X 100	15 mm	40 mm	84 mm	35 mm	100 mm	19.25 mm	M10
KD TD M10X 200	15 mm	40 mm	84 mm	35 mm	200 mm	19.25 mm	M10

Certification

Types M8 for Sprinkler Systems according to Vds Standards. VdS: G4780118
Types TD 10 are approved for Sprinkler Systems by FM

Documents

VDS Approval - Sikla Toggle Stud TD - G4780118