# Beam Clamp TCS 1 HCP

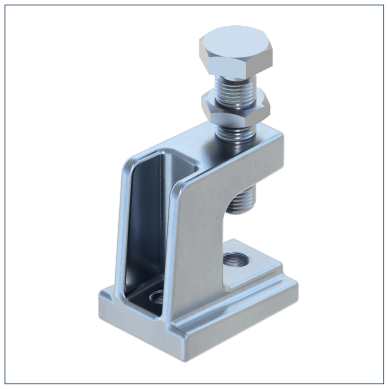

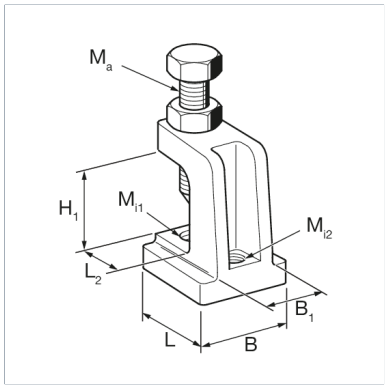


## General Information

Heavy-duty connection elements which, in combination with Grub Screws (M10), are suitable for mounting pipes, ducts and equipment to steel beams (I-, T-, U- and angle steel beams). The combination with a Universal Joint ss provides for vertically aligned attachment to inclined beams. Can serve as single mounting elements, for installing crossbars and for fixing cantilever structures. Due to their special base profile, Beam Clamps TCS 1 can also be slid along and retained in the opening of Sikla Channels MS 41.

## Installation

Tighten the clamping bolt of the Beam Clamp first by hand, then tighten down with a spanner according to the mounting instructions. The hardened point of the clamping bolt will penetrate the comparatively soft material of the beam, ensuring a solid and highly secure connection. Tighten the locking nut for securing the installation.
Use an additional Holding Bracket HK 41 for mounting in the aera of the cutting edge of a channel.
Clamping range on parallel flange: 26 mm
Advice: Read relevant mounting instructions before installation!

## Material Properties

| | |
|---|---|
| Halogen-free | 0 |
| UV-resistant | 0 |

## Material

| | |
|---|---|
| Primary element material | cast steel |
| Connecting element material | steel |
| Surface finish | HCP |
| Corrosion protection class | C4 |

## Forces

| Type | -V{X,perm.} | V{X,perm.} | V{Y,perm.} | -V{Z,perm.} |
|---|---|---|---|---|
| TCS 1 M10/M10 HCP | 3.11 kN | 3.11 kN | 1.83 kN | 5.00 kN |

## Note on loadings

The nominal loads indicated apply to new Beam Clamps fixed to undamaged beam flanges only.

## Types

| Type | Max. flange thickness | Thread connection | Weight | Quantity | Part number |
|---|---|---|---|---|---|
| TCS 1 M10/M10 HCP | 26.00 mm | M10/M10 | 0.223 kg/pcs. | 50 pcs. | 162151 |

## Dimensions

| Type | B | B1 | H1 | L | L2 | Ma | Mi1 | Mi2 |
|---|---|---|---|---|---|---|---|---|
| TCS 1 M10/M10 HCP | 33 mm | 21.5 mm | 26.2 mm | 44 mm | 23 mm | M10 | M10 | M10 |

## Certification

Approved and accepted by VdS and FM for use with stationary fire extinguishing systems. For different application fields see documents.

## Documents

VdS Approval - Sikla Beam Clamp TCS 1 M10/M10 - G4820023

VdS Approval - Sikla Beam Clamp TCS with Safety Strap - G4800040

FM Approval - Sikla Beam Clamps TCS

VdS Approval - Sikla Beam Clamp TCS 1 - G4800039