Universal Joint UG FP

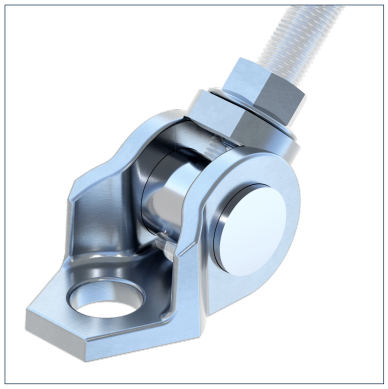

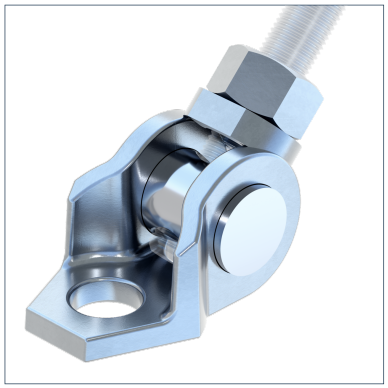

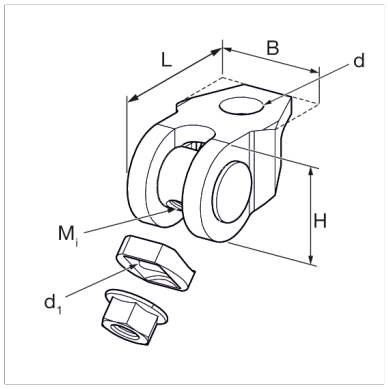

General Information

Universal connection for attachment to non-horizontal components. May be fixed directly to building surfaces, Beam Clamps, channels, etc. Typical uses would include easy on-site manufacture of various tie rod assemblies to support brackets, or reinforcement struts for sliding and fixed point applications (UG FP types are specifically designed for assembly for pipe clamp wings for fixed point constructions). Infinitely variable angle adjustment. Length and height adjustment via rotation of the grub screw in the threaded pivot head. Securely retained threaded pivot head. Secure attachment of nut on the adapter plate.

Installation

Screw the grub screw completely into the pivot head (visual control).
Fix the adjusted angle by tightening the supplied nut against the adapter plate.

Material Properties

Halogen-free	0
UV-resistant	0

Material

Primary element material	cast steel
Surface finish	electro galvanized (Fe//Zn)
Corrosion protection class	C2

Forces

Type	-V{Z,perm.}
UG M12 FP	10.00 kN
UG M16 FP	10.00 kN

Types

Type	Weight	Quantity	Part number
UG M12 FP	0.331 kg/pcs.	25 pcs.	158093
UG M16 FP	0.321 kg/pcs.	25 pcs.	158109

Dimensions

Type	B	d	d1	H	L	Mi
UG M12 FP	45.2 mm	17 mm	12.5 mm	40 mm	71 mm	M12
UG M16 FP	45.2 mm	17 mm	16.5 mm	40 mm	71 mm	M16

Certification

epd-global
Powered by EPD-Norway