Guiding Set FS Z HCP

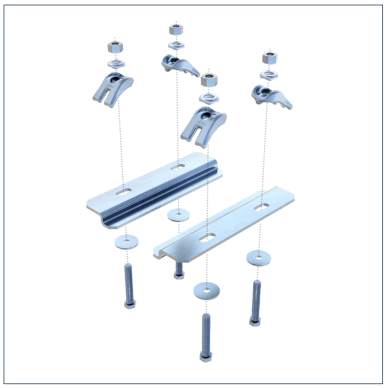

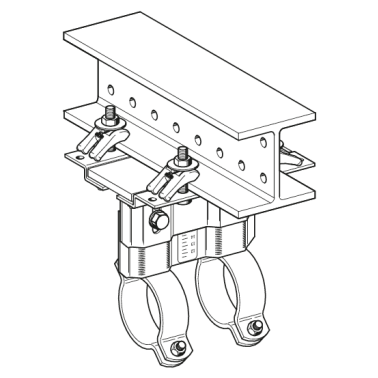

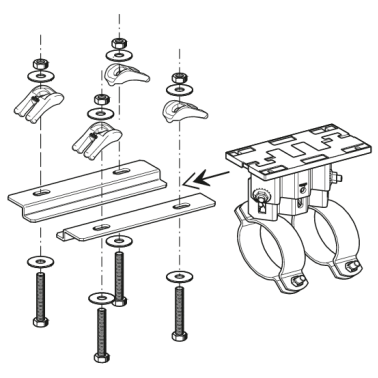

General Information

For suspension of a Guided Pipe Shoe from a siMotec Beam Section 100 resp. 120 or another steel girder with a flange width of 80 up to 120 mm.

Installation

The guide rails are to be fixed with the attached connection kit below the beam with 2mm clearance to the support at the side. Torque for the M12 bolts of the Assembly Set = 85 Nm.

Material Properties

Halogen-free	0
UV-resistant	0

Material

Primary element material	steel cast steel
Connecting element material	steel
Surface finish	HCP
Corrosion protection class	C4

Additional information

Also available with DualShield for high corrosion protection within C5H environments.

Types

Type	Min. flange width	Max. flange width	Weight	Quantity	Part number
FS Z 80/120 HCP	80.00 mm	120.00 mm	2.740 kg/pcs.	1 pcs.	110398

Certification

TÜVRheinland® ZERTIFIZIERT