Assembly Set MS 5P S HCP



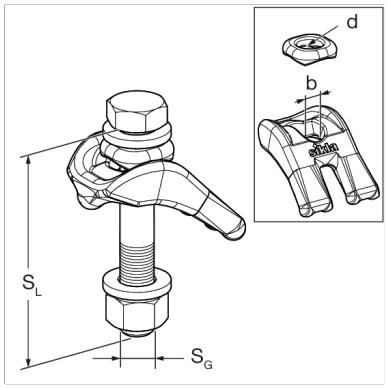

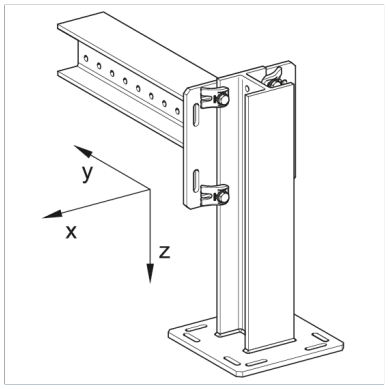

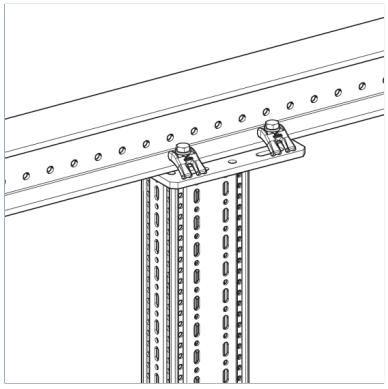

General Information

Element for connecting Beam Bracket TKO, Angled Beam Bracket SKO, End Support WBD or Pivot Joint GE F to a beam section.

Installation

1. Position Beam Clip with the split end on beam section.
2. Install support plate and HR trimming and tighten accordingly.

The support plate secures a rectangular assembly of the bolt and prevents its shifting or bending stress. In conjunction with the HR trimming a continuous and predictable preload force is guaranteed.

Tightening torques:

Type	Size range [mm]	Tightening torque MA [Nm] / plus revolution
M12 S	1 - 30	60 / 90°
M16 S	4 - 40	140 / 90°

Material Properties

Halogen-free	0
UV-resistant	0

Material

Primary element material	steel
Surface finish	HCP
Corrosion protection class	C4

Forces

Type	-V{Y,perm.}	V{Y,perm.}	-V{Z,perm.}	V{Z,perm.}
MS 5P M12 S2 HCP	32.00 kN	32.00 kN	6.80 kN	6.80 kN
MS 5P M12 S HCP	26.30 kN	26.30 kN	12.00 kN	12.00 kN
MS 5P M16 S HCP	32.00 kN	32.00 kN	13.60 kN	13.60 kN

Note on loadings

The specified F(z) data relate to the worst case with flange thicknesses 30 mnm (M12) or 40 mm (M16) as well as a coefficient of adhesion μ(adhesion) = 0,20.
A possibly operating tensile force F(y) isn't included.

Types

Type	Weight	Quantity	Part number
MS 5P M12 S2 HCP	0.610 kg/Set	10 Set	115845
MS 5P M12 S HCP	1.180 kg/Set	10 Set	115843
MS 5P M16 S HCP	2.290 kg/Set	10 Set	115844

Assembly Set MS 5P S HCP

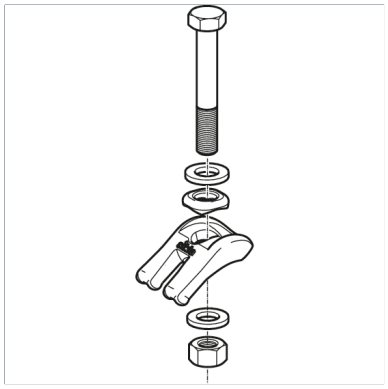

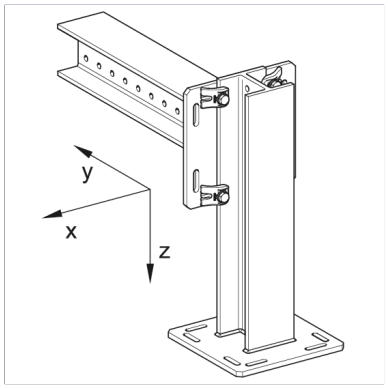

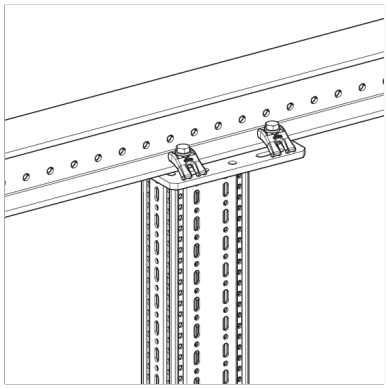

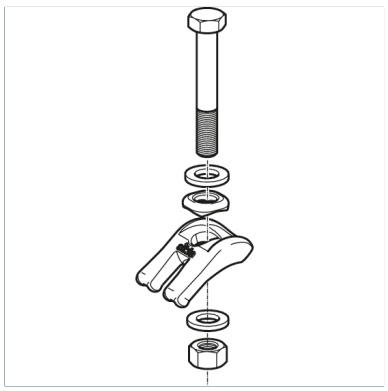

Dimensions

Type	b	d	SG	SL
MS 5P M12 S2 HCP	13 mm	13 mm	M12	80 mm
MS 5P M12 S HCP	13 mm	13 mm	M12	80 mm
MS 5P M16 S HCP	17 mm	17 mm	M16	100 mm

Certification

Documents

Beam Clip SPA 5P AU - abZ Z-14.4-784

Static Guideline - siFramo & siMotec

Assembly Set MS 5P S HCP

