Assembly Group BG17 F100-1/2'' HCP

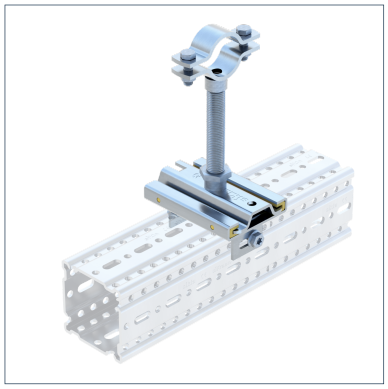

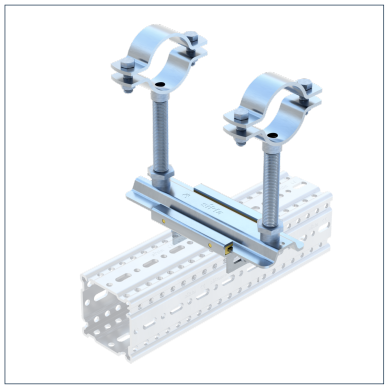

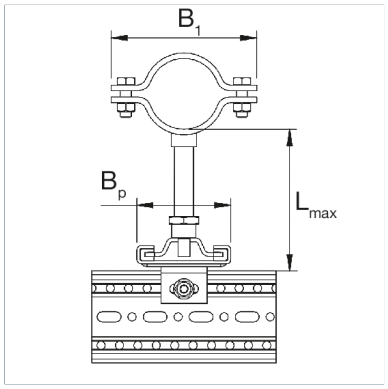

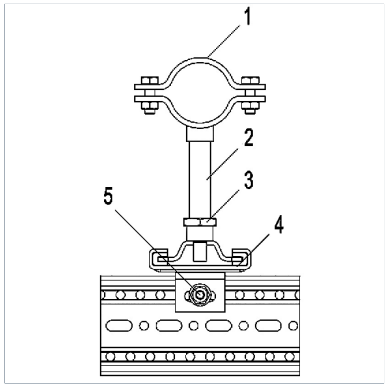

General Information

An Assembly Group for use as a guided support with the heavy Pipe Clamp Stabil I-1/2'. The Assembly Group is designed for use with the Beam Section TP F 100. It is connected using the Self Forming Screw FLS F, and the height is adjusted via the Threaded Tube 1/2'. From DN 65 upwards, the Slide Set GS F 100 1G2 is used to create two pipe supports.

Installation

The assembly of the individual components to form an Assembly Group is carried out during the course of pipe installation on the construction site.

L(max, horizontal) = not recommended

Material Properties

Halogen-free	0
UV-resistant	0

Material

Primary element material	steel
Connecting element material	steel
Surface finish	HCP
Corrosion protection class	C4

Types

Type	Size min.	Size max.	DN	Weight	Quantity	Part number
BG17 F100-1/2'' DN 15 HCP	16.00 mm	22.00 mm	DN 15 (1/2")	2.000 kg/ pcs.	1 pcs.	113851
BG17 F100-1/2'' DN 20 HCP	23.00 mm	27.00 mm	DN 20 (3/4")	2.010 kg/ pcs.	1 pcs.	113852
BG17 F100-1/2'' DN 25 HCP	30.00 mm	34.00 mm	DN 25 (1")	2.040 kg/ pcs.	1 pcs.	113853
BG17 F100-1/2'' DN 32 HCP	39.00 mm	44.00 mm	DN 32 (1 1/4")	2.080 kg/ pcs.	1 pcs.	113854
BG17 F100-1/2'' DN 40 HCP	44.00 mm	49.00 mm	DN 40 (1 1/2")	2.100 kg/ pcs.	1 pcs.	113855
BG17 F100-1/2'' DN 50 HCP	57.00 mm	61.00 mm	DN 50 (2")	2.320 kg/ pcs.	1 pcs.	113856
BG17 F100-1/2'' DN 65 HCP	73.00 mm	77.00 mm	DN 65 (2 1/2")	3.760 kg/ pcs.	1 pcs.	113857
BG17 F100-1/2'' DN 80 HCP	85.00 mm	89.00 mm	DN 80 (3")	3.880 kg/ pcs.	1 pcs.	113858
BG17 F100-1/2'' DN 100 HCP	109.00 mm	116.00 mm	DN 100 (4")	4.460 kg/ pcs.	1 pcs.	113859

Assembly Group BG17 F100-1/2'' HCP

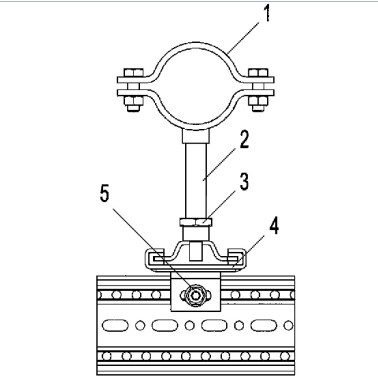

Dimensions

Type	B1	BP	Lmax
BG17 F100-1/2'' DN 15 HCP	85 mm	102 mm	200 mm
BG17 F100-1/2'' DN 20 HCP	92 mm	102 mm	200 mm
BG17 F100-1/2'' DN 25 HCP	100 mm	102 mm	200 mm
BG17 F100-1/2'' DN 32 HCP	112 mm	102 mm	200 mm
BG17 F100-1/2'' DN 40 HCP	117 mm	102 mm	200 mm
BG17 F100-1/2'' DN 50 HCP	139 mm	102 mm	200 mm
BG17 F100-1/2'' DN 65 HCP	156 mm	102 mm	200 mm
BG17 F100-1/2'' DN 80 HCP	168 mm	102 mm	200 mm
BG17 F100-1/2'' DN 100 HCP	194 mm	102 mm	200 mm

Certification