# Assembly Group BG44 F 80-1/2'' HCP

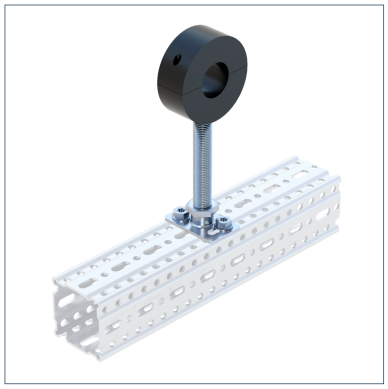

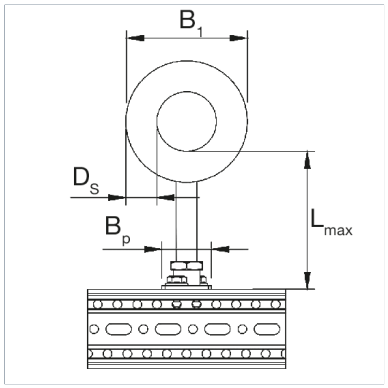


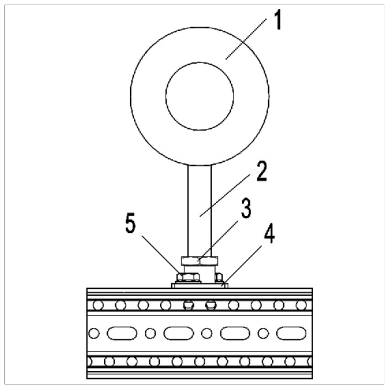


## General Information

An Assembly Group containing components to make up a permanent pipe connection with the insulated Chilled Water Clamp RB for chiller plants and cool water systems. The Assembly Group is designed for use with the Beam Section TP F 80. It is connected using Self Forming Screw FLS F, and the height is adjusted via the Threaded Tube 1/2'.

## Installation

The assembly of the individual components to form an Assembly Group is carried out during the course of pipe installation on the construction site.

## Temperature

| | |
|---|---|
| Max. temperature | 105 °C |
| Min. temperature | -50 °C |

## Thermal Conductivity

| | |
|---|---|
| Thermal conductivity λ {0°C} | λ 0,045 W/Mk |

## Material Properties

| | |
|---|---|
| Halogen-free | 0 |
| UV-resistant | 0 |
| Water vapour diffusion resistance factor | μ 1200 |

## Material

| | |
|---|---|
| Primary element material | steel |
| Isolating element material | PUR |
| Connecting element material | steel |
| Surface finish | HCP |
| Corrosion protection class | C4 |

## Fire Performance

Class B2 according to DIN 4102

## Types

| Type | DN | Weight | Quantity | Part number |
|---|---|---|---|---|
| BG44 F 80-1/2'' DN 15 HCP | DN 15 (1/2") | 0.730 kg/pcs. | 1 pcs. | 110283 |
| BG44 F 80-1/2'' DN 20 HCP | DN 20 (3/4") | 0.730 kg/pcs. | 1 pcs. | 110284 |
| BG44 F 80-1/2'' DN 25 HCP | DN 25 (1") | 0.740 kg/pcs. | 1 pcs. | 110285 |
| BG44 F 80-1/2'' DN 32 HCP | DN 32 (1 1/4") | 0.750 kg/pcs. | 1 pcs. | 110286 |

# Assembly Group BG44 F 80-1/2'' HCP

| Type | DN | Weight | Quantity | Part number |
|---|---|---|---|---|
| BG44 F 80-1/2'' DN 40 HCP | DN 40 (1 1/2") | 0.750 kg/pcs. | 1 pcs. | 110287 |
| BG44 F 80-1/2'' DN 50 HCP | DN 50 (2") | 0.840 kg/pcs. | 1 pcs. | 110289 |
| BG44 F 80-1/2'' DN 65 HCP | DN 65 (2 1/2") | 0.960 kg/pcs. | 1 pcs. | 110290 |
| BG44 F 80-1/2'' DN 80 HCP | DN 80 (3") | 1.010 kg/pcs. | 1 pcs. | 110291 |
| BG44 F 80-1/2'' DN 100 HCP | DN 100 (4") | 1.590 kg/pcs. | 1 pcs. | 110292 |

## Dimensions

| Type | B1 | BP | DS | Lmax | Lmax horizontal |
|---|---|---|---|---|---|
| BG44 F 80-1/2'' DN 15 HCP | 81 mm | 50 mm | 30 mm | 200 mm | 150 mm |
| BG44 F 80-1/2'' DN 20 HCP | 87 mm | 50 mm | 30 mm | 200 mm | 150 mm |
| BG44 F 80-1/2'' DN 25 HCP | 93 mm | 50 mm | 30 mm | 200 mm | 150 mm |
| BG44 F 80-1/2'' DN 32 HCP | 102 mm | 50 mm | 30 mm | 200 mm | 150 mm |
| BG44 F 80-1/2'' DN 40 HCP | 108 mm | 50 mm | 30 mm | 200 mm | 150 mm |
| BG44 F 80-1/2'' DN 50 HCP | 120 mm | 50 mm | 30 mm | 200 mm | 150 mm |
| BG44 F 80-1/2'' DN 65 HCP | 136 mm | 50 mm | 30 mm | 200 mm | 150 mm |
| BG44 F 80-1/2'' DN 80 HCP | 149 mm | 50 mm | 30 mm | 200 mm | 150 mm |
| BG44 F 80-1/2'' DN 100 HCP | 195 mm | 50 mm | 30 mm | 200 mm | 150 mm |

## Certification

