Angle Connector EV CC41-5 HCP

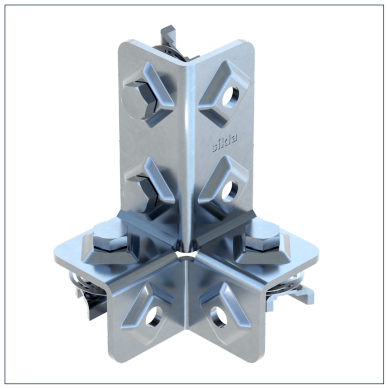

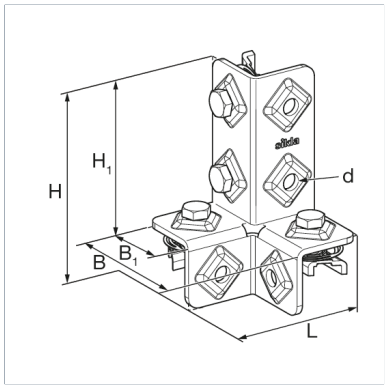

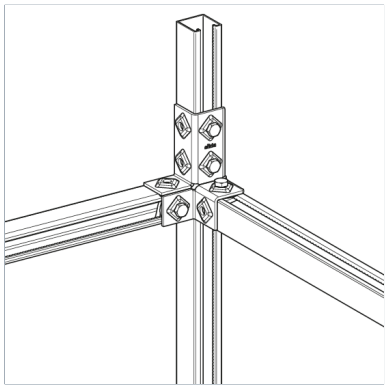

General Information

Pre-assembled connecting element in HCP for three-dimensional frame structures, optimised for linking channels of the 41 series at an angle of 90°. Preferably used in combination with 41/41 square channels. The adjustment for the channel opening could still be chosen. Fast-Technique for 90° joints of Channel System 41. Locks automatically when being put in place and supports its own weight. Secure, form-locking, non-positive connection. Serrated Channel Nut with Hexagon Bolt M10. Ideal shaping for high stiffness. The proven Sikla rhomb guarantees a secure torque and preload force.

Installation

To be used in pairs.
Torque: 40 Nm

Material Properties

Halogen-free	0
UV-resistant	0

Material

Primary element material	steel
Connecting element material	steel
Surface finish	HCP
Corrosion protection class	C4

Forces

Type	-V{Z,perm.}	V{Z,perm.}
EV CC41-5 HCP	5.00 kN	5.00 kN

Note on loadings

Max. perm. Load as centre load per crossbar fixed with 2 Angle Connectors EV CC 41-5.

Types

Type	Weight	Quantity	Part number
EV CC41-5 HCP	0.713 kg/pcs.	10 pcs.	117466

Dimensions

Type	B	B1	d	H	H1	L
EV CC41-5 HCP	93 mm	45 mm	11 mm	140 mm	99 mm	93 mm

Certification