Holding Bracket HK 41

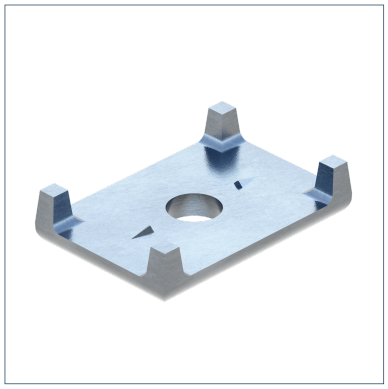

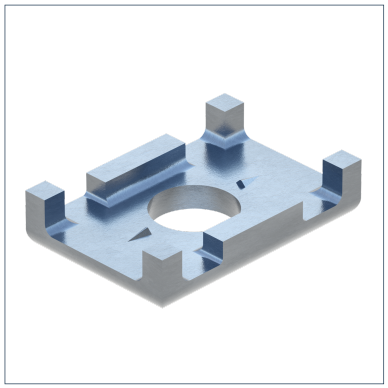

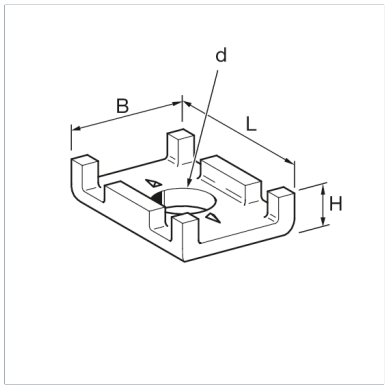

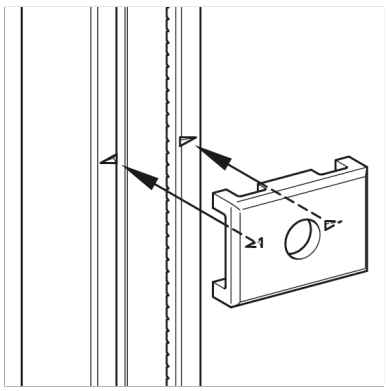

General Information

Safety element for Sikla Channels to be used instead of simple washers. The Holding Bracket prevents the edges along the opening of the channels from bending, and ensures optimum load distribution. When loads are imposing along the channels, 41 Holding Brackets provide for additional safety due to embossed teeth, which penetrate the channel. Suitable for single and double channels. Special blanking guarantees high security and shear force after achieving form closure, especially for screwed through connecting elements.

Installation

Suitable for Sikla channels of 41 mm width.

Material Properties

Halogen-free	0
UV-resistant	0

Material

Primary element material	cast steel
Surface finish	electro galvanized (Fe//Zn)
Corrosion protection class	C2

Types

Type	Weight	Quantity	Part number
HK 41/10	0.062 kg/pcs.	50 pcs.	178247
HK 41/12	0.071 kg/pcs.	50 pcs.	178256
HK 41/16	0.068 kg/pcs.	50 pcs.	178265

Dimensions

Type	B	d	H	L
HK 41/10	41 mm	11 mm	12 mm	35 mm
HK 41/12	41 mm	13 mm	12 mm	35 mm
HK 41/16	41 mm	17 mm	12 mm	35 mm

Certification

epd-global
Powered by EPD-Norway

Holding Bracket HK 41

