# Channel Cover MSA 41

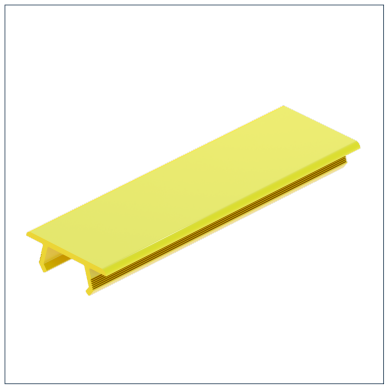

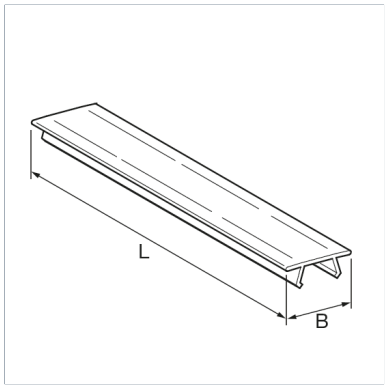


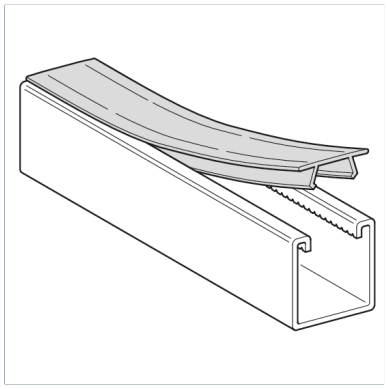

## General Information

For covering the opening of channels. Prevents build-up of dirt deposits inside the channel. Provdes: easy cleaning due to even surface dustproof transitions tight fit by means of strong clamping free of halogens and lack disturbing substances

## Installation

To be mounted by hand without tool.

## Temperature

| | |
|---|---|
| Max. temperature | 80 °C |
| Min. temperature | -20 °C |

## Levels of Resistance

| | |
|---|---|
| Limited resistance | weather resistant |

## Material Properties

| | |
|---|---|
| Halogen-free | 0 |
| UV-resistant | 0 |

## Material

| | |
|---|---|
| Primary element material | HDPE |
| Corrosion protection class | C2 |

## Types

| Type | Weight | Quantity | Part number |
|---|---|---|---|
| MSA 41 | 0.099 kg/m | 2 m | 180623 |

## Dimensions

| Type | B | L |
|---|---|---|
| MSA 41 | 35 mm | 2000 mm |

## Certification