End Cap ADK WK 300-550

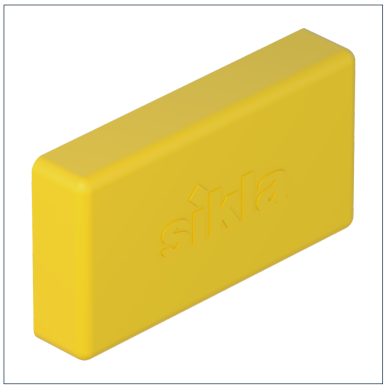

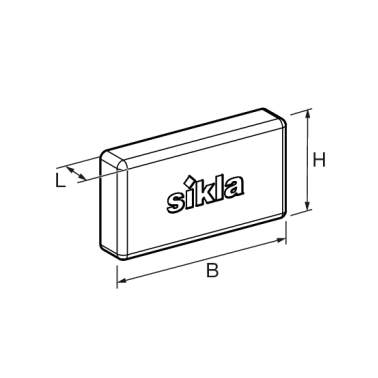

General Information

End Cap for clean finish at the end of Support Brackets WK 300/200 and 550/350.

Material Properties

Halogen-free	0
UV-resistant	0

Material

Primary element material	HDPE

Types

Type	Weight	Quantity	Part number
ADK WK 300-550	0.009 kg/pcs.	50 pcs.	101055

Dimensions

Type	B	H	L
ADK WK 300-550	54.5 mm	29 mm	10 mm

Certification

epd-global
Powered by EPD-Norway